# Shell stitch sweater

M, to fit bust 37 in (94 cm) · US terms



Finished size
**About 42½ in (108 cm) at the bust and about 22½ in (57 cm) long**
To fit a bust of 37 in (94 cm)

Skill
**Easy**
Shells, simple shaping and seams

Yarn
**Light (3), 2 colors**

Hook
**4.5 mm (US 7)**

Gauge
**16 stitches and 13½ rows to 4 in (10 cm)**
In half double crochet (UK half treble).

## What you need

Yarn A: mauve, main color **about 1,150 yd (1,052 m), an estimate**
Yarn B: cream, contrast **about 425 yd (389 m), an estimate**
By weight: about 630 g in all, an estimate, where 100 g is 250 yd (229 m).

Hook: 4.5 mm (US 7), or the size that gives you the gauge. Also: yarn needle, scissors, tape measure and stitch markers.

To find how many balls: divide by the length on your yarn's label and round up. Buy them from one dye lot. The estimate is from the stitches of this size at this gauge.

## Sizes

| Size | To fit bust | Yarn, an estimate | Bust | Length | Armhole depth | Sleeve | Upper sleeve | Cuff | Neck | Back neck |
|---|---|---|---|---|---|---|---|---|---|---|
| **XS** | 29 in (73.5 cm) | about 1,325 yd (1,212 m) | 34½ in (87.5 cm) | 22 in (56 cm) | 7 in (18 cm) | 16½ in (42 cm) | 14¼ in (36 cm) | 9¼ in (23.5 cm) | 19 in (48.5 cm) | 8¼ in (21 cm) |
| **S** | 33 in (84 cm) | about 1,450 yd (1,326 m) | 38½ in (98 cm) | 22¼ in (56.5 cm) | 7½ in (19 cm) | 16½ in (42 cm) | 15¼ in (38.5 cm) | 9¼ in (23.5 cm) | 19½ in (49.5 cm) | 8¼ in (21 cm) |
| **M (this file)** | **37 in (94 cm)** | **about 1,575 yd (1,440 m)** | **42½ in (108 cm)** | **22½ in (57 cm)** | **8 in (20.5 cm)** | **15¾ in (40 cm)** | **16¼ in (41.5 cm)** | **9¼ in (23.5 cm)** | **19½ in (49.5 cm)** | **8¼ in (21 cm)** |
| **L** | 41 in (104 cm) | about 1,700 yd (1,554 m) | 46½ in (118 cm) | 22¾ in (58 cm) | 8½ in (21.5 cm) | 16 in (40.5 cm) | 17¼ in (44 cm) | 9¼ in (23.5 cm) | 20½ in (52 cm) | 8¾ in (22 cm) |
| **1X** | 45 in (114.5 cm) | about 1,850 yd (1,692 m) | 50½ in (128.5 cm) | 23¼ in (59 cm) | 9 in (23 cm) | 15½ in (39.5 cm) | 18¼ in (46.5 cm) | 9¼ in (23.5 cm) | 20½ in (52 cm) | 8¾ in (22 cm) |


For your own crochet, gifts and handmade pieces you sell. Do not resell or share this PDF or copies of it.

| | | | | | | | | | | |
|---|---|---|---|---|---|---|---|---|---|---|
| **2X** | 49 in (124.5 cm) | about 1,975 yd (1,806 m) | 54½ in (138.5 cm) | 23¼ in (59 cm) | 9½ in (24 cm) | 15½ in (39.5 cm) | 19¼ in (49 cm) | 10¾ in (27.5 cm) | 21 in (53.5 cm) | 8¾ in (22 cm) |
| **3X** | 53 in (134.5 cm) | about 2,100 yd (1,920 m) | 58½ in (148.5 cm) | 23½ in (59.5 cm) | 10 in (25.5 cm) | 14¾ in (37.5 cm) | 20¼ in (51.5 cm) | 10¾ in (27.5 cm) | 21 in (53.5 cm) | 8¾ in (22 cm) |
| **4X** | 57 in (145 cm) | about 2,225 yd (2,035 m) | 62½ in (159 cm) | 23¾ in (60.5 cm) | 10½ in (26.5 cm) | 14¾ in (37.5 cm) | 21¼ in (54 cm) | 10¾ in (27.5 cm) | 21½ in (54.5 cm) | 9¼ in (23.5 cm) |
| **5X** | 61 in (155 cm) | about 2,375 yd (2,172 m) | 66½ in (169 cm) | 24 in (61 cm) | 11 in (28 cm) | 14 in (35.5 cm) | 22¼ in (56.5 cm) | 12¼ in (31 cm) | 21½ in (54.5 cm) | 9¼ in (23.5 cm) |

## Schematic

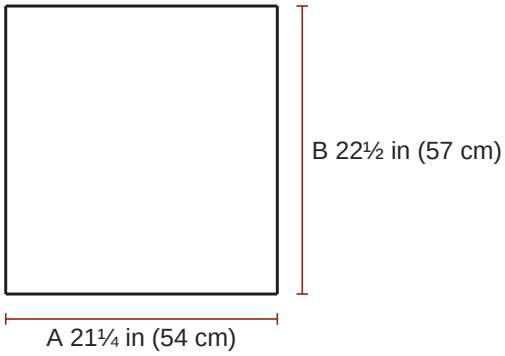


**Back**
A half the bust
B the length

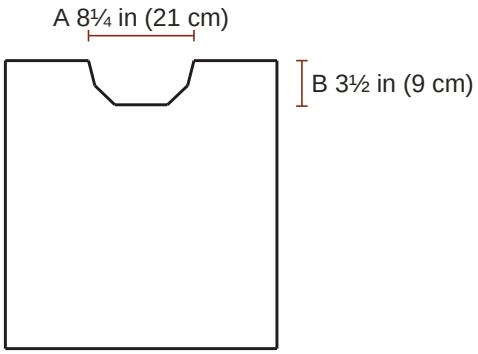


**Front**
A the neck
B how deep the neck is

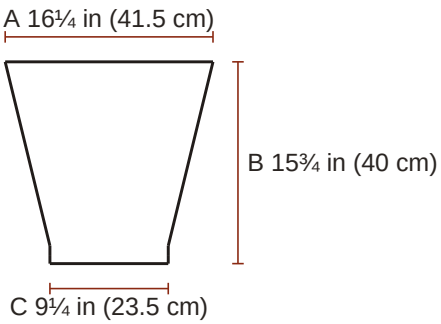


**Sleeve (make 2)**
A the top of the sleeve, opened flat
B the sleeve
C around the cuff

## Gauge

**16 stitches and 13½ rows to 4 in (10 cm)** in half double crochet.

> **The swatch.** A test piece to measure and pull out. It is not the start of the pattern. Ch 25; begin in the 2nd ch from the hook and work 20 rows of half double crochet on 24 sts, about 6 in (15 cm) wide and 6 in (15 cm) high, and measure 4 in (10 cm) in the middle. Use a larger hook if your swatch is small, a smaller one if it is large. A shell band (3 rows: two rows of shells and the row that fills them in) is about 1 in (2.5 cm) deep. Single crochet rows: about 18.5 rows to 4 in (10 cm). A row of scallops on the edge is about ½ in (1 cm) deep.


For your own crochet, gifts and handmade pieces you sell. Do not resell or share this PDF or copies of it.

## Notes

- The finished bust is 5½ in (14 cm) wider than the body measurement at each size. Choose by the finished measurement you like; no fit is promised beyond the measurements given.
- The turning chain (ch 1 for single and half double crochet, ch 2 for double crochet) never counts as a stitch. Work the first stitch of every row into the first stitch, at the base of the turning chain.
- The chain at the start of a round never counts as a stitch. Work the first stitch of the round into the stitch at its base, where the round was joined.
- Odd-numbered rows are right side rows. Mark the right side of each piece with a stitch marker or a scrap of yarn.
- Shell: 5 dc in one stitch. The third row of a shell band (sc, hdc and dc in turn) fills in the hollows between the shells and makes the edge level again: work 1 stitch in each stitch.
- Where a size has plain stitches beside the shells, the words of the row give them.
- A decrease counts as one stitch.
- Sew every seam with the yarn needle and yarn A: cut a length about three times as long as the seam.
- Color changes in rows: work the last yarn over of the last stitch of the row before with the new yarn. Cut the old yarn, leaving an end of about 6 in (15 cm), or, if it is needed again at the same edge within 6 rows and that edge is straight, carry it loosely up the edge.

## Instructions

M, to fit bust 37 in (94 cm). US terms.

**ch** chain, **sl st** slip stitch, **sc** single crochet (UK double crochet), **hdc** half double crochet (UK half treble), **dc** double crochet (UK treble), **Rnd** round, **st** stitch.
**RS** right side, the one that shows.
**5 dc in next st**: all in one stitch. **sc in next 2 sts**: one in each.
**[ ] 14 times**: work what is inside 14 times in all.
**(85 hdc)**: the stitches you have when the row is done. **How to read a pattern**.

### Special stitches

**hdc2tog (half double crochet 2 stitches together (UK half treble 2 together)):** [yarn over, insert the hook in the next stitch and pull up a loop] twice (5 loops on the hook); yarn over and pull through all 5 loops.

### Back

**Yarn A, mauve.**

| | | |
|---|---|---|
| ☐ **Foundation** | With yarn A, ch 86. Colors: rows 1 to 4 yarn A; rows 5 and 6 yarn B; rows 7 to 11 yarn A; rows 12 and 13 yarn B; rows 14 to 18 yarn A; rows 19 and 20 yarn B; rows 21 to 25 yarn A; rows 26 and 27 yarn B; rows 28 to 32 yarn A; rows 33 and 34 yarn B; rows 35 to 39 yarn A; rows 40 and 41 yarn B; rows 42 to 46 yarn A; rows 47 and 48 yarn B; rows 49 to 53 yarn A; rows 54 and 55 yarn B; rows 56 to 71 yarn A. | |
| ☐ **Row 1 (RS)** | Hdc in 2nd ch from hook and in each ch across | (85 hdc) |
| ☐ **Rows 2 to 4** 2 3 4 | Ch 1, turn; hdc in each st across | (85 hdc) |
| ☐ **Row 5** | Ch 1, turn; sc in first st,<br>**[**skip next 2 sts, 5 dc in next st, skip next 2 sts, sc in next st**] 14 times** | (15 sc, 70 dc) |


For your own crochet, gifts and handmade pieces you sell. Do not resell or share this PDF or copies of it.

| | | |
|---|---|---|
| ☐ **Row 6** | Ch 2, turn; 3 dc in first st,<br>**[**skip next 2 sts, sc in next st, skip next 2 sts, 5 dc in next st**] 13 times**,<br>skip next 2 sts, sc in next st, skip next 2 sts, 3 dc in last st | (71 dc, 14 sc) |
| ☐ **Row 7** | Ch 1, turn; sc in next 2 sts, hdc in next st,<br>**[**dc in next st, hdc in next st, sc in next 3 sts, hdc in next st**] 13 times**,<br>dc in next st, hdc in next st, sc in next 2 sts | (43 sc, 28 hdc, 14 dc) |
| ☐ **Rows 8 to 11** | Ch 1, turn; hdc in each st across | (85 hdc) |
| ☐ **Rows 12 to 60** | Repeat Rows 5 to 11, 7 more times | (85 hdc) |
| ☐ **Rows 61 to 71** | Ch 1, turn; hdc in each st across | (85 hdc) |
| ☐ **End** | The back measures about 21¼ in (54 cm) wide and 22 in (56 cm) long. Fasten off. | |

8 9 10 11

12 13 14 15 16 17 18 19 20 21 22 23 24 25 26 27 28 29 30 31 32 33 34 35 36 37 38 39
40 41 42 43 44 45 46 47 48 49 50 51 52 53 54 55 56 57 58 59 60

61 62 63 64 65 66 67 68 69 70 71

## Front

**Yarn A, mauve.**

| | | |
|---|---|---|
| ☐ **Foundation** | With yarn A, ch 86. Colors, counted from row 1: 4 rows yarn A, 2 rows yarn B, 1 row yarn A; repeat these 7 rows to the end (the last repeat may stop part way). | |
| ☐ **Row 1 (RS)** | Hdc in 2nd ch from hook and in each ch across | (85 hdc) |
| ☐ **Rows 2 to 4** | Ch 1, turn; hdc in each st across | (85 hdc) |
| ☐ **Row 5** | Ch 1, turn; sc in first st,<br>**[**skip next 2 sts, 5 dc in next st, skip next 2 sts, sc in next st**] 14 times** | (15 sc, 70 dc) |
| ☐ **Row 6** | Ch 2, turn; 3 dc in first st,<br>**[**skip next 2 sts, sc in next st, skip next 2 sts, 5 dc in next st**] 13 times**,<br>skip next 2 sts, sc in next st, skip next 2 sts, 3 dc in last st | (71 dc, 14 sc) |
| ☐ **Row 7** | Ch 1, turn; sc in next 2 sts, hdc in next st,<br>**[**dc in next st, hdc in next st, sc in next 3 sts, hdc in next st**] 13 times**,<br>dc in next st, hdc in next st, sc in next 2 sts | (43 sc, 28 hdc, 14 dc) |
| ☐ **Rows 8 to 11** | Ch 1, turn; hdc in each st across | (85 hdc) |
| ☐ **Rows 12 to 53** | Repeat Rows 5 to 11, 6 more times | (85 hdc) |
| ☐ **Row 54** | Ch 1, turn; sc in first st,<br>**[**skip next 2 sts, 5 dc in next st, skip next 2 sts, sc in next st**] 14 times** | (15 sc, 70 dc) |

2 3 4

8 9 10 11

12 13 14 15 16 17 18 19 20 21 22 23 24 25 26 27 28 29 30 31 32 33 34 35 36 37 38 39
40 41 42 43 44 45 46 47 48 49 50 51 52 53


For your own crochet, gifts and handmade pieces you sell. Do not resell or share this PDF or copies of it.

| | | |
|---|---|---|
| ☐ **Row 55** | Ch 2, turn; 3 dc in first st,<br>**[**skip next 2 sts, sc in next st, skip next 2 sts, 5 dc in next st**] 13 times**,<br>skip next 2 sts, sc in next st, skip next 2 sts, 3 dc in last st | (71 dc, 14 sc) |
| ☐ **Row 56** | Ch 1, turn; sc in next 2 sts, hdc in next st,<br>**[**dc in next st, hdc in next st, sc in next 3 sts, hdc in next st**] 13 times**,<br>dc in next st, hdc in next st, sc in next 2 sts | (43 sc, 28 hdc, 14 dc) |
| ☐ **Rows 57 to 59**<br>57 58 59 | Ch 1, turn; hdc in each st across | (85 hdc) |
| ☐ **End** | Do not fasten off. | |

## Front, first side of the neck

**Yarn A, mauve.**

| | | |
|---|---|---|
| ☐ **Foundation** | Go on from row 59 of the front. This is the right side as worn. The neck edge is at the end of the next row. Colors: yarn A throughout. | |
| ☐ **Row 60** | Ch 1, turn; hdc in next 34 sts, leave the last 51 sts unworked | (34 hdc) |
| ☐ **Row 61** | Ch 1, turn; hdc2tog, hdc in each st across | (33 hdc) |
| ☐ **Row 62** | Ch 1, turn; hdc in each st across to last 2 sts, hdc2tog | (32 hdc) |
| ☐ **Rows 63 to 68**<br>63 64 65 66 67 68 | Repeat Rows 61 and 62, 3 more times (30, 28, 26 hdc at the ends of the repeats) | (26 hdc) |
| ☐ **Rows 69 to 71**<br>69 70 71 | Ch 1, turn; hdc in each st across | (26 hdc) |
| ☐ **End** | The 26 sts left are the shoulder. Fasten off. | |

## Front, second side of the neck

**Yarn A, mauve.**

| | | |
|---|---|---|
| ☐ **Foundation** | Go back to row 59 of the front, with the same side facing you as for row 60 of the first side. Skip the next 17 unworked sts of row 59 for the neck and join yarn A in the next st. This is the left side as worn. The first st of row 60 goes in the joining st. The neck edge is at the beginning of that row. Colors: yarn A throughout. | |
| ☐ **Row 60** | Ch 1; hdc in each st across | (34 hdc) |
| ☐ **Row 61** | Ch 1, turn; hdc in each st across to last 2 sts, hdc2tog | (33 hdc) |
| ☐ **Row 62** | Ch 1, turn; hdc2tog, hdc in each st across | (32 hdc) |
| ☐ **Rows 63 to 68**<br>63 64 65 66 67 68 | Repeat Rows 61 and 62, 3 more times (30, 28, 26 hdc at the ends of the repeats) | (26 hdc) |
| ☐ **Rows 69 to 71**<br>69 70 71 | Ch 1, turn; hdc in each st across | (26 hdc) |
| ☐ **End** | The 26 sts left are the shoulder. Fasten off. | |


For your own crochet, gifts and handmade pieces you sell. Do not resell or share this PDF or copies of it.

## Sleeve: make 2

**Yarn A, mauve.**

| | | |
|---|---|---|
| ☐ **Foundation** | With yarn A, ch 38. Colors: rows 1 to 4 yarn A; then, counted from row 5: 2 rows yarn B, 5 rows yarn A; repeat these 7 rows to row 46; rows 47 to 49 yarn A. | |
| ☐ **Row 1 (RS)** | Hdc in 2nd ch from hook and in each ch across | (37 hdc) |
| ☐ **Row 2** | Ch 1, turn; 2 hdc in first st, hdc in each st across to last st, 2 hdc in last st | (39 hdc) |
| ☐ **Row 3** | Ch 1, turn; hdc in each st across | (39 hdc) |
| ☐ **Row 4** | Ch 1, turn; 2 hdc in first st, hdc in each st across to last st, 2 hdc in last st | (41 hdc) |
| ☐ **Row 5** | Ch 1, turn; sc in next 3 sts,<br>**[**skip next 2 sts, 5 dc in next st, skip next 2 sts, sc in next st**] 6 times**,<br>sc in next 2 sts | (11 sc, 30 dc) |
| ☐ **Row 6** | Ch 2, turn; dc in next 2 sts, 3 dc in next st,<br>**[**skip next 2 sts, sc in next st, skip next 2 sts, 5 dc in next st**] 5 times**,<br>skip next 2 sts, sc in next st, skip next 2 sts, 3 dc in next st, dc in next 2 sts | (35 dc, 6 sc) |
| ☐ **Row 7** | Ch 1, turn; sc in next 4 sts, hdc in next st,<br>**[**dc in next st, hdc in next st, sc in next 3 sts, hdc in next st**] 5 times**,<br>dc in next st, hdc in next st, sc in next 4 sts | (23 sc, 12 hdc, 6 dc) |
| ☐ **Rows 8 to 9**<br>8 9 | Ch 1, turn; hdc in each st across | (41 hdc) |
| ☐ **Rows 10 to 11**<br>10 11 | Ch 1, turn; 2 hdc in first st, hdc in each st across to last st, 2 hdc in last st | (45 hdc) |
| ☐ **Row 12** | Ch 1, turn; sc in next 2 sts,<br>**[**skip next 2 sts, 5 dc in next st, skip next 2 sts, sc in next st**] 7 times**,<br>sc in next st | (10 sc, 35 dc) |
| ☐ **Row 13** | Ch 2, turn; dc in next st, 3 dc in next st,<br>**[**skip next 2 sts, sc in next st, skip next 2 sts, 5 dc in next st**] 6 times**,<br>skip next 2 sts, sc in next st, skip next 2 sts, 3 dc in next st, dc in next st | (38 dc, 7 sc) |
| ☐ **Row 14** | Ch 1, turn; sc in next 3 sts, hdc in next st,<br>**[**dc in next st, hdc in next st, sc in next 3 sts, hdc in next st**] 6 times**,<br>dc in next st, hdc in next st, sc in next 3 sts | (24 sc, 14 hdc, 7 dc) |
| ☐ **Rows 15 to 16**<br>15 16 | Ch 1, turn; hdc in each st across | (45 hdc) |
| ☐ **Row 17** | Ch 1, turn; 2 hdc in first st, hdc in each st across to last st, 2 hdc in last st | (47 hdc) |
| ☐ **Row 18** | Ch 1, turn; hdc in each st across | (47 hdc) |
| ☐ **Row 19** | Ch 1, turn; sc in next 3 sts,<br>**[**skip next 2 sts, 5 dc in next st, skip next 2 sts, sc in next st**] 7 times**,<br>sc in next 2 sts | (12 sc, 35 dc) |


For your own crochet, gifts and handmade pieces you sell. Do not resell or share this PDF or copies of it.

| | | |
|---|---|---|
| ☐ **Row 20** | Ch 2, turn; dc in next 2 sts, 3 dc in next st,<br>**[**skip next 2 sts, sc in next st, skip next 2 sts, 5 dc in next st**] 6 times**,<br>skip next 2 sts, sc in next st, skip next 2 sts, 3 dc in next st, dc in next 2 sts | (40 dc, 7 sc) |
| ☐ **Row 21** | Ch 1, turn; sc in next 4 sts, hdc in next st,<br>**[**dc in next st, hdc in next st, sc in next 3 sts, hdc in next st**] 6 times**,<br>dc in next st, hdc in next st, sc in next 4 sts | (26 sc, 14 hdc, 7 dc) |
| ☐ **Row 22** | Ch 1, turn; hdc in each st across | (47 hdc) |
| ☐ **Rows 23 to 24**<br>23 24 | Ch 1, turn; 2 hdc in first st, hdc in each st across to last st, 2 hdc in last st | (51 hdc) |
| ☐ **Row 25** | Ch 1, turn; hdc in each st across | (51 hdc) |
| ☐ **Row 26** | Ch 1, turn; sc in next 2 sts,<br>**[**skip next 2 sts, 5 dc in next st, skip next 2 sts, sc in next st**] 8 times**,<br>sc in next st | (11 sc, 40 dc) |
| ☐ **Row 27** | Ch 2, turn; dc in next st, 3 dc in next st,<br>**[**skip next 2 sts, sc in next st, skip next 2 sts, 5 dc in next st**] 7 times**,<br>skip next 2 sts, sc in next st, skip next 2 sts, 3 dc in next st, dc in next st | (43 dc, 8 sc) |
| ☐ **Row 28** | Ch 1, turn; sc in next 3 sts, hdc in next st,<br>**[**dc in next st, hdc in next st, sc in next 3 sts, hdc in next st**] 7 times**,<br>dc in next st, hdc in next st, sc in next 3 sts | (27 sc, 16 hdc, 8 dc) |
| ☐ **Row 29** | Ch 1, turn; hdc in each st across | (51 hdc) |
| ☐ **Rows 30 to 31**<br>30 31 | Ch 1, turn; 2 hdc in first st, hdc in each st across to last st, 2 hdc in last st | (55 hdc) |
| ☐ **Row 32** | Ch 1, turn; hdc in each st across | (55 hdc) |
| ☐ **Row 33** | Ch 1, turn; sc in first st,<br>**[**skip next 2 sts, 5 dc in next st, skip next 2 sts, sc in next st**] 9 times** | (10 sc, 45 dc) |
| ☐ **Row 34** | Ch 2, turn; 3 dc in first st,<br>**[**skip next 2 sts, sc in next st, skip next 2 sts, 5 dc in next st**] 8 times**,<br>skip next 2 sts, sc in next st, skip next 2 sts, 3 dc in last st | (46 dc, 9 sc) |
| ☐ **Row 35** | Ch 1, turn; sc in next 2 sts, hdc in next st,<br>**[**dc in next st, hdc in next st, sc in next 3 sts, hdc in next st**] 8 times**,<br>dc in next st, hdc in next st, sc in next 2 sts | (28 sc, 18 hdc, 9 dc) |
| ☐ **Row 36** | Ch 1, turn; hdc in each st across | (55 hdc) |
| ☐ **Row 37** | Ch 1, turn; 2 hdc in first st, hdc in each st across to last st, 2 hdc in last st | (57 hdc) |
| ☐ **Rows 38 to 39**<br>38 39 | Repeat Rows 36 and 37, once more | (59 hdc) |
| ☐ **Row 40** | Ch 1, turn; sc in next 3 sts,<br>**[**skip next 2 sts, 5 dc in next st, skip next 2 sts, sc in next st**] 9 times**,<br>sc in next 2 sts | (14 sc, 45 dc) |


For your own crochet, gifts and handmade pieces you sell. Do not resell or share this PDF or copies of it.

| | | |
|---|---|---|
| ☐ **Row 41** | Ch 2, turn; dc in next 2 sts, 3 dc in next st,<br>**[**skip next 2 sts, sc in next st, skip next 2 sts, 5 dc in next st**] 8 times**,<br>skip next 2 sts, sc in next st, skip next 2 sts, 3 dc in next st, dc in next 2 sts | (50 dc, 9 sc) |
| ☐ **Row 42** | Ch 1, turn; sc in next 4 sts, hdc in next st,<br>**[**dc in next st, hdc in next st, sc in next 3 sts, hdc in next st**] 8 times**,<br>dc in next st, hdc in next st, sc in next 4 sts | (32 sc, 18 hdc, 9 dc) |
| ☐ **Row 43** | Ch 1, turn; hdc in each st across | (59 hdc) |
| ☐ **Row 44** | Ch 1, turn; 2 hdc in first st, hdc in each st across to last st, 2 hdc in last st | (61 hdc) |
| ☐ **Rows 45 to 48**<br>45 46 47 48 | Repeat Rows 43 and 44, 2 more times (63, 65 hdc at the ends of the repeats) | (65 hdc) |
| ☐ **Row 49** | Ch 1, turn; hdc in each st across | (65 hdc) |
| ☐ **End** | The sleeve measures about 16¼ in (41.5 cm) across the top and 15¼ in (38.5 cm) long.<br>Fasten off. | |

## Hem scallops: make 2, one on the back and one on the front

**Yarn B, cream.**

| | | |
|---|---|---|
| ☐ **Foundation** | With the right side of a piece, the back or the front, facing and its foundation chain at the top, join yarn B in the first ch at the right-hand end; ch 1, sc in each of the 85 chs, along the free side of the chain (85 sc). This is row 1, and a right side row. | |
| ☐ **Row 2** | Ch 1, turn; sc in first st,<br>**[**skip next 2 sts, 5 dc in next st, skip next 2 sts, sc in next st**] 14 times** | (15 sc, 70 dc) |
| ☐ **End** | Fasten off. | |

## Cuff scallops: make 2, one on each sleeve

**Yarn B, cream.**

| | | |
|---|---|---|
| ☐ **Foundation** | With the right side of a sleeve facing and its foundation chain at the top, join yarn B in the first ch at the right-hand end; ch 1, sc in each of the 37 chs, along the free side of the chain (37 sc). This is row 1, and a right side row. | |
| ☐ **Row 2** | Ch 1, turn; sc in first st,<br>**[**skip next 2 sts, 5 dc in next st, skip next 2 sts, sc in next st**] 6 times** | (7 sc, 30 dc) |
| ☐ **End** | Fasten off. | |


For your own crochet, gifts and handmade pieces you sell. Do not resell or share this PDF or copies of it.

### Neckband

**Yarn B, cream.**

| | | |
|---|---|---|
| ☐ **Foundation** | Work this at step 2 of Assembly. With the right side facing, join yarn B in the first open st of the back neck, at the right shoulder seam (as worn); ch 1, sc in each of the 33 open sts of the back neck, sc in the end of each of the 12 rows down the left side of the neck, with 2 sc in the 4th and 10th of them (14 sc), sc in each of the 17 sts left at the front, and sc in the end of each of the 12 rows up the right side of the neck, with 2 sc in the 4th and 10th of them (14 sc); 78 sc in all; join with sl st in first sc. This is rnd 1. | |
| ☐ **Rnds 2 to 4**<br>2 3 4 | Ch 1; sc in each st around; join with sl st in first sc | (78 sc) |
| ☐ **End** | Fasten off. | |

### Assembly

**1.** Shoulders: lay the front on the back with right sides together. Sew the 26 sts of each shoulder of the front to the 26 sts at that end of the top edge of the back. The middle 33 sts of the back stay open for the neck.

**2.** Neckband: work it now, as written above.

**3.** Markers: at each side edge of the back and of the front, place a marker in the end of row 45. The 27 rows from the marker to the shoulder seam, about 8 in (20.5 cm), are half of the armhole.

**4.** Sleeves: with right sides together, put the middle of the top edge of a sleeve at a shoulder seam and its two ends at the markers. Sew the top edge on: 32 sts of the sleeve to the 27 row ends of the front, and the other 33 sts to the 27 row ends of the back, about 6 sts to every 5 row ends.

**5.** Sides and sleeves: fold the sweater at the shoulders, right sides together. Sew each sleeve seam from the edge of the cuff scallops to the underarm, and go on down the side seam, row end to row end, so that the shell bands of the front meet those of the back, to the edge of the hem scallops.

## Finishing

- Weave in all the ends. Wash as the yarn label says and lay flat to the measurements to dry.

In all: 17,188 stitches (6,035 in the back, 5,015 in the front, 333 in the front, first side of the neck, 333 in the front, second side of the neck, 2,497 in each sleeve, 85 in each hem scallops, 37 in each cuff scallops, 234 in the neckband).

Found a mistake in this pattern? Tell us at flossfield.com, under Make a request.


For your own crochet, gifts and handmade pieces you sell. Do not resell or share this PDF or copies of it.