Snowflake sweater for winter

M, to fit bust 37 in (94 cm) · US terms



Finished size

About 42 in (106.5 cm) at the bust and about 23¼ in (59 cm) long

To fit a bust of 37 in (94 cm)

Skill

Intermediate

Two yarns in a row from a chart that is written out row by row, simple shaping, seams

Yarn

Light (3), 2 colors

Hook

4.5 mm (US 7)

Gauge

16 stitches and 18½ rows to 4 in (10 cm)

In single crochet (UK double crochet).

What you need

Yarn A: navy, main color — **about 1,375 yd (1,257 m), an estimate**

Yarn B: cream, contrast — **about 115 yd (105 m), an estimate**

By weight: about 600 g in all, an estimate, where 100 g is 250 yd (229 m).

Hook: 4.5 mm (US 7), or the size that gives you the gauge. Also: yarn needle, scissors, tape measure, stitch markers and about 8 in (20 cm) of thread or narrow ribbon to hang it by.

To find how many balls: divide by the length on your yarn's label and round up. Buy them from one dye lot. The estimate is from the stitches of this size at this gauge.

Sizes

Size	To fit bust	Yarn, an estimate	Bust	Length, with the hem rib	Armhole depth	Sleeve, with the cuff rib	Upper sleeve	Cuff around	Back neck	Neck around, at the neckband	Snowflake across
XS	29 in (73.5 cm)	about 1,255 yd (1,148 m)	34 in (86.5 cm)	22¾ in (58 cm)	7 in (18 cm)	16½ in (42 cm)	14 in (35.5 cm)	7½ in (19 cm)	9 in (23 cm)	22 in (56 cm)	11 in (28 cm)
S	33 in (84 cm)	about 1,360 yd (1,244 m)	38 in (96.5 cm)	22¾ in (58 cm)	7½ in (19 cm)	16½ in (42 cm)	15 in (38 cm)	7½ in (19 cm)	9 in (23 cm)	22 in (56 cm)	11 in (28 cm)
M (this file)	**37 in (94 cm)**	**about 1,490 yd (1,362 m)**	**42 in (106.5 cm)**	**23¼ in (59 cm)**	**8 in (20.5 cm)**	**16 in (40.5 cm)**	**16 in (40.5 cm)**	**7½ in (19 cm)**	**9 in (23 cm)**	**22 in (56 cm)**	**11 in (28 cm)**
L	41 in (104 cm)	about 1,620 yd (1,481 m)	46 in (117 cm)	23¼ in (59 cm)	8½ in (21.5 cm)	16 in (40.5 cm)	17 in (43 cm)	8½ in (21.5 cm)	9 in (23 cm)	22 in (56 cm)	11 in (28 cm)

For your own crochet, gifts and handmade pieces you sell. Do not resell or share this PDF or copies of it.

1X	45 in (114.5 cm)	about 1,750 yd (1,600 m)	50 in (127 cm)	23½ in (59.5 cm)	9 in (23 cm)	15½ in (39.5 cm)	18 in (45.5 cm)	8½ in (21.5 cm)	9 in (23 cm)	22 in (56 cm)	11 in (28 cm)
2X	49 in (124.5 cm)	about 1,880 yd (1,719 m)	54 in (137 cm)	24 in (61 cm)	9½ in (24 cm)	15½ in (39.5 cm)	19 in (48.5 cm)	8½ in (21.5 cm)	9 in (23 cm)	22 in (56 cm)	11 in (28 cm)
3X	53 in (134.5 cm)	about 1,985 yd (1,815 m)	58 in (147.5 cm)	24 in (61 cm)	10 in (25.5 cm)	15 in (38 cm)	20 in (51 cm)	9 in (23 cm)	9 in (23 cm)	22 in (56 cm)	11 in (28 cm)

Schematic

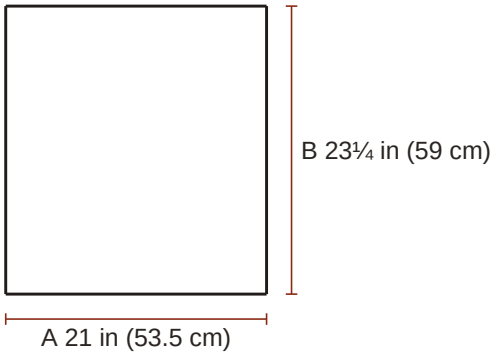

Back
A half the bust
B the length

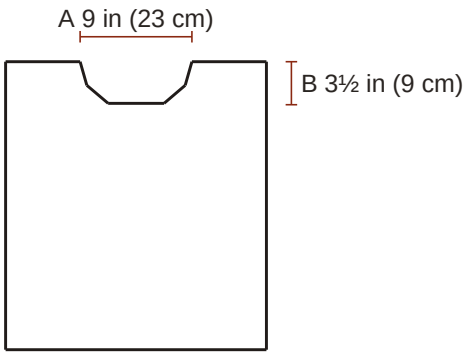

Front
A the neck
B how deep the neck is

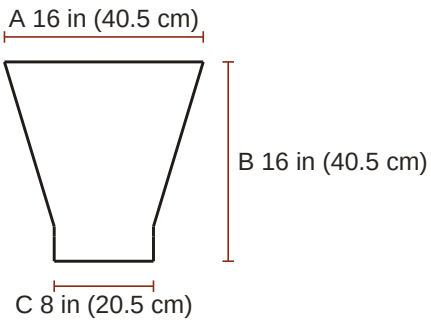

Sleeve (make 2)
A the top of the sleeve, opened flat
B the sleeve
C half the cuff

Gauge

16 stitches and 18½ rows to 4 in (10 cm) in single crochet.

> **The swatch.** A test piece to measure and pull out. It is not the start of the pattern. Ch 25; begin in the 2nd ch from the hook and work 28 rows of single crochet on 24 sts, about 6 in (15 cm) wide and 6 in (15 cm) high, and measure 4 in (10 cm) in the middle. Use a larger hook if your swatch is small, a smaller one if it is large. Ribs: worked sideways, 17 rows and 16 sts to 4 in (10 cm), so a rib of 8 sts is about 2 in (5 cm) deep. The snowflake rows have the same gauge: work them a little more loosely than the plain rows, for the yarn inside the stitches makes them firm.

For your own crochet, gifts and handmade pieces you sell. Do not resell or share this PDF or copies of it.

Notes

- The finished bust is 5 in (12.5 cm) wider than the body measurement at each size. Choose by the finished measurement you like; no fit is promised beyond the measurements given.
- The turning chain is ch 1 in all the rows and never counts as a stitch. Work the first stitch of every row into the first stitch, at the base of the turning chain.
- The chain at the start of a round never counts as a stitch. Work the first stitch of the round into the stitch at its base, where the round was joined.
- Odd-numbered rows are right side rows. Mark the right side of each piece with a stitch marker or a scrap of yarn.
- Two yarns in a row (tapestry crochet): in the rows of the snowflake and of the small flakes a yarn is named before each group of stitches, and all the stitches of that group are in that yarn. Carry the other yarn inside the stitches, from the first stitch of the row to the last: lay it along the tops of the stitches of the row below and work over it, so that both yarns are at the edge when you turn.
- To change the yarn, work the last yarn over of the stitch before with the new yarn. Pull the carried yarn straight after every group of stitches, but not tight. Leave ends of about 6 in (15 cm) where a yarn is joined or cut.
- The ribs are worked sideways in single crochet in the back loop (UK: double crochet). The back, the front and the sleeves are worked up from a long edge of a rib. A rib draws in: it is a little narrower than the piece above it.
- A decrease counts as one stitch.
- Whip stitch: put the needle in through both edges from the back to the front, take the yarn over the edge, and do the same again a short step farther on.
- Sew every seam with the yarn needle and yarn A: cut a length about three times as long as the seam.
- Color changes in rows: work the last yarn over of the last stitch of the row before with the new yarn. Cut the old yarn, leaving an end of about 6 in (15 cm), or, if it is needed again at the same edge within 6 rows and that edge is straight, carry it loosely up the edge.
- In back loop only: insert the hook under the loop of the stitch that is farther from you, and leave the nearer loop free.

Instructions

M, to fit bust 37 in (94 cm). US terms.

ch chain, **sl st** slip stitch, **sc** single crochet (UK double crochet), **Rnd** round, **st** stitch.
RS right side, the one that shows.
(8 sc): the stitches you have when the row is done. **How to read a pattern**.

Special stitches

sc2tog (single crochet 2 stitches together (UK double crochet 2 together)): Insert the hook in the next stitch and pull up a loop, insert the hook in the following stitch and pull up a loop (3 loops on the hook); yarn over and pull through all 3 loops.

Hem rib: make 2, one for the back and one for the front

Yarn A, navy.

☐ **Foundation**	With yarn A, ch 9.	
☐ **Row 1 (RS)**	Sc in 2nd ch from hook and in each ch across	(8 sc)

For your own crochet, gifts and handmade pieces you sell. Do not resell or share this PDF or copies of it.

☐ **Rows 2 to 84** Ch 1, turn; sc in back loop only of each st across (8 sc)



☐ **End** Fasten off.

Back

Yarn A, navy.

☐ **Foundation** Hold a hem rib with one long edge at the top. Join yarn A at the right-hand end of that edge; ch 1, sc in the end of each rib row across (84 sc). This is row 1, and a right side row.

☐ **Rows 2 to 98** Ch 1, turn; sc in each st across (84 sc)

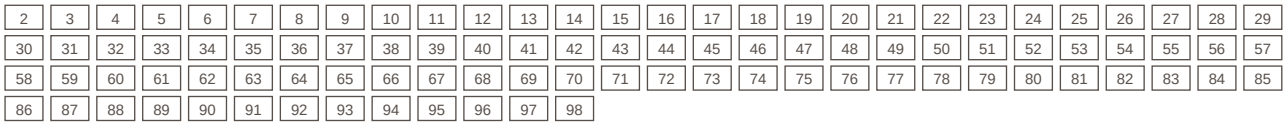

☐ **End** The back measures about 21 in (53.5 cm) wide and 23¼ in (59 cm) long, with the rib. Row 98 is its top edge. Fasten off.

Front

Yarns in order of use: A, navy; B, cream.

☐ **Foundation** The snowflake is worked into rows 27 to 77. It is 44 sts wide and 51 rows high and lies in the middle of the front, with 20 sts of yarn A at each side of it. The right half and the left half of every row are alike, so the words are the same for right side rows and wrong side rows. All the other rows of the front are in yarn A. Join yarn B at the beginning of row 27 and cut it after row 77. Hold a hem rib with one long edge at the top. Join yarn A at the right-hand end of that edge; ch 1, sc in the end of each rib row across (84 sc). This is row 1, and a right side row.

☐ **Rows 2 to 26** Ch 1, turn; sc in each st across (84 sc)



☐ **Row 27** Ch 1, turn; with A sc in next 41 sts, with B sc in next 2 sts, with A sc in next 41 sts (84 sc)

☐ **Rows 28 to 29** Ch 1, turn; with A sc in next 40 sts, with B sc in next 4 sts, with A sc in next 40 sts (84 sc)



☐ **Row 30** Ch 1, turn; with A sc in next 39 sts, with B sc in next 6 sts, with A sc in next 39 sts (84 sc)

☐ **Row 31** Ch 1, turn; with A sc in next 26 sts, with B sc in next st, with A sc in next 6 sts, with B sc in next st, with A sc in next 6 sts, with B sc in next 4 sts, with A sc in next 6 sts, with B sc in next st, with A sc in next 6 sts, with B sc in next st, with A sc in next 26 sts (84 sc)

☐ **Row 32** Ch 1, turn; with A sc in next 25 sts, with B sc in next 3 sts, with A sc in next 5 sts, with B sc in next 2 sts, with A sc in next 6 sts, with B sc in next 2 sts, with A sc in next 6 sts, with B sc in next 2 sts, with A sc in next 5 sts, with B sc in next 3 sts, with A sc in next 25 sts (84 sc)

For your own crochet, gifts and handmade pieces you sell. Do not resell or share this PDF or copies of it.

☐ **Row 33**	Ch 1, turn; with A sc in next 24 sts, with B sc in next 4 sts, with A sc in next 5 sts, with B sc in next 3 sts, with A sc in next 5 sts, with B sc in next 2 sts, with A sc in next 5 sts, with B sc in next 3 sts, with A sc in next 5 sts, with B sc in next 4 sts, with A sc in next 24 sts	(84 sc)
☐ **Row 34**	Ch 1, turn; with A sc in next 24 sts, with B sc in next 5 sts, with A sc in next 4 sts, with B sc in next 4 sts, with A sc in next 4 sts, with B sc in next 2 sts, with A sc in next 4 sts, with B sc in next 4 sts, with A sc in next 4 sts, with B sc in next 5 sts, with A sc in next 24 sts	(84 sc)
☐ **Row 35**	Ch 1, turn; with A sc in next 24 sts, with B sc in next 4 sts, with A sc in next 5 sts, with B sc in next 5 sts, with A sc in next 3 sts, with B sc in next 2 sts, with A sc in next 3 sts, with B sc in next 5 sts, with A sc in next 5 sts, with B sc in next 4 sts, with A sc in next 24 sts	(84 sc)
☐ **Row 36**	Ch 1, turn; with A sc in next 25 sts, with B sc in next 3 sts, with A sc in next 5 sts, with B sc in next 2 sts, with A sc in next st, with B sc in next 3 sts, with A sc in next 2 sts, with B sc in next 2 sts, with A sc in next 2 sts, with B sc in next 3 sts, with A sc in next st, with B sc in next 2 sts, with A sc in next 5 sts, with B sc in next 3 sts, with A sc in next 25 sts	(84 sc)
☐ **Row 37**	Ch 1, turn; with A sc in next 26 sts, with B sc in next st, with A sc in next 6 sts, with B sc in next 2 sts, with A sc in next 2 sts, with B sc in next 2 sts, with A sc in next 2 sts, with B sc in next 2 sts, with A sc in next 2 sts, with B sc in next 2 sts, with A sc in next 2 sts, with B sc in next 2 sts, with A sc in next 6 sts, with B sc in next st, with A sc in next 26 sts	(84 sc)
☐ **Row 38**	Ch 1, turn; with A sc in next 33 sts, with B sc in next 2 sts, with A sc in next 3 sts, with B sc in next 2 sts, with A sc in next 4 sts, with B sc in next 2 sts, with A sc in next 3 sts, with B sc in next 2 sts, with A sc in next 33 sts	(84 sc)
☐ **Rows 39 to 40** 39 40	Ch 1, turn; with A sc in next 33 sts, with B sc in next 2 sts, with A sc in next 4 sts, with B sc in next 2 sts, with A sc in next 2 sts, with B sc in next 2 sts, with A sc in next 4 sts, with B sc in next 2 sts, with A sc in next 33 sts	(84 sc)
☐ **Row 41**	Ch 1, turn; with A sc in next 33 sts, with B sc in next 3 sts, with A sc in next 3 sts, with B sc in next 2 sts, with A sc in next 2 sts, with B sc in next 2 sts, with A sc in next 3 sts, with B sc in next 3 sts, with A sc in next 33 sts	(84 sc)
☐ **Row 42**	Ch 1, turn; with A sc in next 34 sts, with B sc in next 3 sts, with A sc in next 2 sts, with B sc in next 2 sts, with A sc in next 2 sts, with B sc in next 2 sts, with A sc in next 2 sts, with B sc in next 3 sts, with A sc in next 34 sts	(84 sc)
☐ **Row 43**	Ch 1, turn; with A sc in next 24 sts, with B sc in next 9 sts, with A sc in next 2 sts, with B sc in next 2 sts, with A sc in next 2 sts, with B sc in next 2 sts, with A sc in next 2 sts, with B sc in next 2 sts, with A sc in next 2 sts, with B sc in next 2 sts, with A sc in next 2 sts, with B sc in next 2 sts, with A sc in next 2 sts, with B sc in next 9 sts, with A sc in next 24 sts	(84 sc)

For your own crochet, gifts and handmade pieces you sell. Do not resell or share this PDF or copies of it.

☐ **Row 44**	Ch 1, turn; with A sc in next 25 sts, with B sc in next 2 sts, with A sc in next 5 sts, with B sc in next 2 sts, with A sc in next 2 sts, with B sc in next 2 sts, with A sc in next st, with B sc in next 2 sts, with A sc in next 2 sts, with B sc in next 2 sts, with A sc in next st, with B sc in next 2 sts, with A sc in next 2 sts, with B sc in next 2 sts, with A sc in next 5 sts, with B sc in next 2 sts, with A sc in next 25 sts	(84 sc)
☐ **Row 45**	Ch 1, turn; with A sc in next 26 sts, with B sc in next 2 sts, with A sc in next 5 sts, with B sc in next 2 sts, with A sc in next 2 sts, with B sc in next 4 sts, with A sc in next 2 sts, with B sc in next 4 sts, with A sc in next 2 sts, with B sc in next 2 sts, with A sc in next 5 sts, with B sc in next 2 sts, with A sc in next 26 sts	(84 sc)
☐ **Row 46**	Ch 1, turn; with A sc in next 26 sts, with B sc in next 3 sts, with A sc in next 5 sts, with B sc in next 2 sts, with A sc in next 2 sts, with B sc in next 3 sts, with A sc in next 2 sts, with B sc in next 3 sts, with A sc in next 2 sts, with B sc in next 2 sts, with A sc in next 5 sts, with B sc in next 3 sts, with A sc in next 26 sts	(84 sc)
☐ **Row 47**	Ch 1, turn; with A sc in next 27 sts, with B sc in next 3 sts, with A sc in next 4 sts, with B sc in next 3 sts, with A sc in next 2 sts, with B sc in next 2 sts, with A sc in next 2 sts, with B sc in next 2 sts, with A sc in next 2 sts, with B sc in next 3 sts, with A sc in next 4 sts, with B sc in next 3 sts, with A sc in next 27 sts	(84 sc)
☐ **Row 48**	Ch 1, turn; with A sc in next 28 sts, with B sc in next 2 sts, with A sc in next 5 sts, with B sc in next 3 sts, with A sc in next 2 sts, with B sc in next st, with A sc in next 2 sts, with B sc in next st, with A sc in next 2 sts, with B sc in next 3 sts, with A sc in next 5 sts, with B sc in next 2 sts, with A sc in next 28 sts	(84 sc)
☐ **Row 49**	Ch 1, turn; with A sc in next 22 sts, with B sc in next st, with A sc in next 6 sts, with B sc in next 9 sts, with A sc in next 2 sts, with B sc in next st, with A sc in next 2 sts, with B sc in next st, with A sc in next 2 sts, with B sc in next 9 sts, with A sc in next 6 sts, with B sc in next st, with A sc in next 22 sts	(84 sc)
☐ **Row 50**	Ch 1, turn; with A sc in next 21 sts, with B sc in next 3 sts, with A sc in next 6 sts, with B sc in next 9 sts, with A sc in next 2 sts, with B sc in next 2 sts, with A sc in next 2 sts, with B sc in next 9 sts, with A sc in next 6 sts, with B sc in next 3 sts, with A sc in next 21 sts	(84 sc)
☐ **Rows 51 to 53** 51 52 53	Ch 1, turn; with A sc in next 20 sts, with B sc in next 10 sts, with A sc in next 10 sts, with B sc in next 4 sts, with A sc in next 10 sts, with B sc in next 10 sts, with A sc in next 20 sts	(84 sc)
☐ **Row 54**	Ch 1, turn; with A sc in next 21 sts, with B sc in next 3 sts, with A sc in next 6 sts, with B sc in next 9 sts, with A sc in next 2 sts, with B sc in next 2 sts, with A sc in next 2 sts, with B sc in next 9 sts, with A sc in next 6 sts, with B sc in next 3 sts, with A sc in next 21 sts	(84 sc)

For your own crochet, gifts and handmade pieces you sell. Do not resell or share this PDF or copies of it.

☐ **Row 55**	Ch 1, turn; with A sc in next 22 sts, with B sc in next st, with A sc in next 6 sts, with B sc in next 9 sts, with A sc in next 2 sts, with B sc in next st, with A sc in next 2 sts, with B sc in next st, with A sc in next 2 sts, with B sc in next 9 sts, with A sc in next 6 sts, with B sc in next st, with A sc in next 22 sts	(84 sc)
☐ **Row 56**	Ch 1, turn; with A sc in next 28 sts, with B sc in next 2 sts, with A sc in next 5 sts, with B sc in next 3 sts, with A sc in next 2 sts, with B sc in next st, with A sc in next 2 sts, with B sc in next st, with A sc in next 2 sts, with B sc in next 3 sts, with A sc in next 5 sts, with B sc in next 2 sts, with A sc in next 28 sts	(84 sc)
☐ **Row 57**	Ch 1, turn; with A sc in next 27 sts, with B sc in next 3 sts, with A sc in next 4 sts, with B sc in next 3 sts, with A sc in next 2 sts, with B sc in next 2 sts, with A sc in next 2 sts, with B sc in next 2 sts, with A sc in next 2 sts, with B sc in next 3 sts, with A sc in next 4 sts, with B sc in next 3 sts, with A sc in next 27 sts	(84 sc)
☐ **Row 58**	Ch 1, turn; with A sc in next 26 sts, with B sc in next 3 sts, with A sc in next 5 sts, with B sc in next 2 sts, with A sc in next 2 sts, with B sc in next 3 sts, with A sc in next 2 sts, with B sc in next 3 sts, with A sc in next 2 sts, with B sc in next 2 sts, with A sc in next 5 sts, with B sc in next 3 sts, with A sc in next 26 sts	(84 sc)
☐ **Row 59**	Ch 1, turn; with A sc in next 26 sts, with B sc in next 2 sts, with A sc in next 5 sts, with B sc in next 2 sts, with A sc in next 2 sts, with B sc in next 4 sts, with A sc in next 2 sts, with B sc in next 4 sts, with A sc in next 2 sts, with B sc in next 2 sts, with A sc in next 5 sts, with B sc in next 2 sts, with A sc in next 26 sts	(84 sc)
☐ **Row 60**	Ch 1, turn; with A sc in next 25 sts, with B sc in next 2 sts, with A sc in next 5 sts, with B sc in next 2 sts, with A sc in next 2 sts, with B sc in next 2 sts, with A sc in next st, with B sc in next 2 sts, with A sc in next 2 sts, with B sc in next 2 sts, with A sc in next st, with B sc in next 2 sts, with A sc in next 2 sts, with B sc in next 2 sts, with A sc in next 5 sts, with B sc in next 2 sts, with A sc in next 25 sts	(84 sc)
☐ **Row 61**	Ch 1, turn; with A sc in next 24 sts, with B sc in next 9 sts, with A sc in next 2 sts, with B sc in next 2 sts, with A sc in next 2 sts, with B sc in next 2 sts, with A sc in next 2 sts, with B sc in next 2 sts, with A sc in next 2 sts, with B sc in next 2 sts, with A sc in next 2 sts, with B sc in next 9 sts, with A sc in next 24 sts	(84 sc)
☐ **Row 62**	Ch 1, turn; with A sc in next 34 sts, with B sc in next 3 sts, with A sc in next 2 sts, with B sc in next 2 sts, with A sc in next 2 sts, with B sc in next 2 sts, with A sc in next 2 sts, with B sc in next 3 sts, with A sc in next 34 sts	(84 sc)
☐ **Row 63**	Ch 1, turn; with A sc in next 33 sts, with B sc in next 3 sts, with A sc in next 3 sts, with B sc in next 2 sts, with A sc in next 2 sts, with B sc in next 2 sts, with A sc in next 3 sts, with B sc in next 3 sts, with A sc in next 33 sts	(84 sc)

For your own crochet, gifts and handmade pieces you sell. Do not resell or share this PDF or copies of it.

☐ **Rows 64 to 65** 64 65	Ch 1, turn; with A sc in next 33 sts, with B sc in next 2 sts, with A sc in next 4 sts, with B sc in next 2 sts, with A sc in next 2 sts, with B sc in next 2 sts, with A sc in next 4 sts, with B sc in next 2 sts, with A sc in next 33 sts	(84 sc)
☐ **Row 66**	Ch 1, turn; with A sc in next 33 sts, with B sc in next 2 sts, with A sc in next 3 sts, with B sc in next 2 sts, with A sc in next 4 sts, with B sc in next 2 sts, with A sc in next 3 sts, with B sc in next 2 sts, with A sc in next 33 sts	(84 sc)
☐ **Row 67**	Ch 1, turn; with A sc in next 26 sts, with B sc in next st, with A sc in next 6 sts, with B sc in next 2 sts, with A sc in next 2 sts, with B sc in next 2 sts, with A sc in next 2 sts, with B sc in next 2 sts, with A sc in next 2 sts, with B sc in next 2 sts, with A sc in next 2 sts, with B sc in next 2 sts, with A sc in next 6 sts, with B sc in next st, with A sc in next 26 sts	(84 sc)
☐ **Row 68**	Ch 1, turn; with A sc in next 25 sts, with B sc in next 3 sts, with A sc in next 5 sts, with B sc in next 2 sts, with A sc in next st, with B sc in next 3 sts, with A sc in next 2 sts, with B sc in next 2 sts, with A sc in next 2 sts, with B sc in next 3 sts, with A sc in next st, with B sc in next 2 sts, with A sc in next 5 sts, with B sc in next 3 sts, with A sc in next 25 sts	(84 sc)
☐ **Row 69**	Ch 1, turn; with A sc in next 24 sts, with B sc in next 4 sts, with A sc in next 5 sts, with B sc in next 5 sts, with A sc in next 3 sts, with B sc in next 2 sts, with A sc in next 3 sts, with B sc in next 5 sts, with A sc in next 5 sts, with B sc in next 4 sts, with A sc in next 24 sts	(84 sc)
☐ **Row 70**	Ch 1, turn; with A sc in next 24 sts, with B sc in next 5 sts, with A sc in next 4 sts, with B sc in next 4 sts, with A sc in next 4 sts, with B sc in next 2 sts, with A sc in next 4 sts, with B sc in next 4 sts, with A sc in next 4 sts, with B sc in next 5 sts, with A sc in next 24 sts	(84 sc)
☐ **Row 71**	Ch 1, turn; with A sc in next 24 sts, with B sc in next 4 sts, with A sc in next 5 sts, with B sc in next 3 sts, with A sc in next 5 sts, with B sc in next 2 sts, with A sc in next 5 sts, with B sc in next 3 sts, with A sc in next 5 sts, with B sc in next 4 sts, with A sc in next 24 sts	(84 sc)
☐ **Row 72**	Ch 1, turn; with A sc in next 25 sts, with B sc in next 3 sts, with A sc in next 5 sts, with B sc in next 2 sts, with A sc in next 6 sts, with B sc in next 2 sts, with A sc in next 6 sts, with B sc in next 2 sts, with A sc in next 5 sts, with B sc in next 3 sts, with A sc in next 25 sts	(84 sc)
☐ **Row 73**	Ch 1, turn; with A sc in next 26 sts, with B sc in next st, with A sc in next 6 sts, with B sc in next st, with A sc in next 6 sts, with B sc in next 4 sts, with A sc in next 6 sts, with B sc in next st, with A sc in next 6 sts, with B sc in next st, with A sc in next 26 sts	(84 sc)
☐ **Row 74**	Ch 1, turn; with A sc in next 39 sts, with B sc in next 6 sts, with A sc in next 39 sts	(84 sc)
☐ **Rows 75 to 76** 75 76	Ch 1, turn; with A sc in next 40 sts, with B sc in next 4 sts, with A sc in next 40 sts	(84 sc)
☐ **Row 77**	Ch 1, turn; with A sc in next 41 sts, with B sc in next 2 sts, with A sc in next 41 sts	(84 sc)

For your own crochet, gifts and handmade pieces you sell. Do not resell or share this PDF or copies of it.

☐ **Rows 78 to 82**	Ch 1, turn; sc in each st across	(84 sc)
78 79 80 81 82		
☐ **End**	Do not fasten off.	

Front, first side of the neck

Yarn A, navy.

☐ **Foundation**	Go on from row 82 of the front. This is the left side as worn. The neck edge is at the end of the next row.	
☐ **Row 83**	Ch 1, turn; sc in next 32 sts, leave the last 52 sts unworked	(32 sc)
☐ **Row 84**	Ch 1, turn; sc2tog, sc in each st across	(31 sc)
☐ **Row 85**	Ch 1, turn; sc in each st across to last 2 sts, sc2tog	(30 sc)
☐ **Rows 86 to 91**	Repeat Rows 84 and 85, 3 more times (28, 26, 24 sc at the ends of the repeats)	(24 sc)
86 87 88 89 90 91		
☐ **Rows 92 to 98**	Ch 1, turn; sc in each st across	(24 sc)
92 93 94 95 96 97 98		
☐ **End**	The 24 sts left are the shoulder. Fasten off.	

Front, second side of the neck

Yarn A, navy.

☐ **Foundation**	Go back to row 82 of the front, with the same side facing you as for row 83 of the first side. Skip the next 20 unworked sts of row 82 for the neck and join yarn A in the next st. This is the right side as worn. The first st of row 83 goes in the joining st. The neck edge is at the beginning of that row.	
☐ **Row 83**	Ch 1; sc in each st across	(32 sc)
☐ **Row 84**	Ch 1, turn; sc in each st across to last 2 sts, sc2tog	(31 sc)
☐ **Row 85**	Ch 1, turn; sc2tog, sc in each st across	(30 sc)
☐ **Rows 86 to 91**	Repeat Rows 84 and 85, 3 more times (28, 26, 24 sc at the ends of the repeats)	(24 sc)
86 87 88 89 90 91		
☐ **Rows 92 to 98**	Ch 1, turn; sc in each st across	(24 sc)
92 93 94 95 96 97 98		
☐ **End**	The 24 sts left are the shoulder. Fasten off.	

Cuff rib: make 2

Yarn A, navy.

☐ **Foundation**	With yarn A, ch 9.	
☐ **Row 1 (RS)**	Sc in 2nd ch from hook and in each ch across	(8 sc)

For your own crochet, gifts and handmade pieces you sell. Do not resell or share this PDF or copies of it.

☐ **Rows 2 to 32** Ch 1, turn; sc in back loop only of each st across (8 sc)

2 3 4 5 6 7 8 9 10 11 12 13 14 15 16 17 18 19 20 21 22 23 24 25 26 27 28 29 30 31 32

☐ **End** Fasten off.

Sleeve: make 2

Yarns in order of use: A, navy; B, cream.

☐ **Foundation** Three small flakes are worked into rows 8 to 16, side by side, each 8 sts wide, with 3 sts of yarn A between them and 1 st of yarn A at each side. Rows 4 and 5, and rows 19 and 20, are lines of yarn B. The increases begin above this border, and from row 21 on all is in yarn A. Yarn B waits at the edge from row 5 to row 8 and from row 16 to row 19; carry it loosely up that edge. Colors: rows 1 to 3 yarn A; rows 4 and 5 yarn B; rows 6 to 18 yarn A; rows 19 and 20 yarn B; rows 21 to 65 yarn A. Hold a cuff rib with one long edge at the top. Join yarn A at the right-hand end of that edge; ch 1, sc in the end of each rib row across (32 sc). This is row 1, and a right side row.

☐ **Rows 2 to 7** Ch 1, turn; sc in each st across (32 sc)

2 3 4 5 6 7

☐ **Row 8** Ch 1, turn; with A sc in next 4 sts, with B sc in next 2 sts, with A sc in next 9 sts, with B sc in next 2 sts, with A sc in next 9 sts, with B sc in next 2 sts, with A sc in next 4 sts (32 sc)

☐ **Row 9** Ch 1, turn; with A sc in next st, with B sc in next st, with A sc in next 2 sts, with B sc in next 2 sts, with A sc in next 2 sts, with B sc in next st, with A sc in next 3 sts, with B sc in next st, with A sc in next 2 sts, with B sc in next 2 sts, with A sc in next 2 sts, with B sc in next st, with A sc in next 3 sts, with B sc in next st, with A sc in next 2 sts, with B sc in next 2 sts, with A sc in next 2 sts, with B sc in next st, with A sc in next st (32 sc)

☐ **Row 10** Ch 1, turn; with A sc in next 2 sts, with B sc in next st, with A sc in next st, with B sc in next 2 sts, with A sc in next st, with B sc in next st, with A sc in next 5 sts, with B sc in next st, with A sc in next st, with B sc in next 2 sts, with A sc in next st, with B sc in next st, with A sc in next 5 sts, with B sc in next st, with A sc in next st, with B sc in next 2 sts, with A sc in next st, with B sc in next st, with A sc in next 2 sts (32 sc)

☐ **Row 11** Ch 1, turn; with A sc in next 3 sts, with B sc in next 4 sts, with A sc in next 7 sts, with B sc in next 4 sts, with A sc in next 7 sts, with B sc in next 4 sts, with A sc in next 3 sts (32 sc)

☐ **Row 12** Ch 1, turn; with A sc in next st, with B sc in next 8 sts, with A sc in next 3 sts, with B sc in next 8 sts, with A sc in next 3 sts, with B sc in next 8 sts, with A sc in next st (32 sc)

☐ **Row 13** Ch 1, turn; with A sc in next 3 sts, with B sc in next 4 sts, with A sc in next 7 sts, with B sc in next 4 sts, with A sc in next 7 sts, with B sc in next 4 sts, with A sc in next 3 sts (32 sc)

For your own crochet, gifts and handmade pieces you sell. Do not resell or share this PDF or copies of it.

☐ **Row 14**	Ch 1, turn; with A sc in next 2 sts, with B sc in next st, with A sc in next st, with B sc in next 2 sts, with A sc in next st, with B sc in next st, with A sc in next 5 sts, with B sc in next st, with A sc in next st, with B sc in next 2 sts, with A sc in next st, with B sc in next st, with A sc in next 5 sts, with B sc in next st, with A sc in next st, with B sc in next 2 sts, with A sc in next st, with B sc in next st, with A sc in next 2 sts	(32 sc)
☐ **Row 15**	Ch 1, turn; with A sc in next st, with B sc in next st, with A sc in next 2 sts, with B sc in next 2 sts, with A sc in next 2 sts, with B sc in next st, with A sc in next 3 sts, with B sc in next st, with A sc in next 2 sts, with B sc in next 2 sts, with A sc in next 2 sts, with B sc in next st, with A sc in next 3 sts, with B sc in next st, with A sc in next 2 sts, with B sc in next 2 sts, with A sc in next 2 sts, with B sc in next st, with A sc in next st	(32 sc)
☐ **Row 16**	Ch 1, turn; with A sc in next 4 sts, with B sc in next 2 sts, with A sc in next 9 sts, with B sc in next 2 sts, with A sc in next 9 sts, with B sc in next 2 sts, with A sc in next 4 sts	(32 sc)
☐ **Rows 17 to 21**	Ch 1, turn; sc in each st across	(32 sc)
	17 18 19 20 21	
☐ **Row 22**	Ch 1, turn; 2 sc in first st, sc in each st across to last st, 2 sc in last st	(34 sc)
☐ **Rows 23 to 52**	Repeat Rows 21 and 22, 15 more times (36, 38, 40, 42, 44, 46, 48, 50, 52, 54, 56, 58, 60, 62, 64 sc at the ends of the repeats)	(64 sc)
	23 24 25 26 27 28 29 30 31 32 33 34 35 36 37 38 39 40 41 42 43 44 45 46 47 48 49 50 51 52	
☐ **Rows 53 to 65**	Ch 1, turn; sc in each st across	(64 sc)
	53 54 55 56 57 58 59 60 61 62 63 64 65	
☐ **End**	The sleeve measures about 16 in (40.5 cm) across the top and 16 in (40.5 cm) long, with the rib. Fasten off.	

Neckband

Yarn A, navy.

☐ **Foundation**	Work this at step 2 of Assembly. Work it loosely. With the right side facing, join yarn A in the first open st of the back neck, at the right shoulder seam (as worn); ch 1, sc in each of the 36 open sts of the back neck, sc in the end of each of the 16 rows down the left side of the neck (16 sc), sc in each of the 20 sts left at the front, and sc in the end of each of the 16 rows up the right side of the neck (16 sc); 88 sc in all; join with sl st in first sc. This is rnd 1.	
☐ **Rnds 2 to 10**	Ch 1; sc in each st around; join with sl st in first sc	(88 sc)
	2 3 4 5 6 7 8 9 10	
☐ **End**	Fasten off, leaving an end of about 58 in (145 cm) for sewing.	

For your own crochet, gifts and handmade pieces you sell. Do not resell or share this PDF or copies of it.

Assembly

1. Shoulders: lay the front on the back with right sides together. Sew the 24 sts of each shoulder of the front to the 24 sts at that end of the top edge of the back. The middle 36 sts of the back stay open for the neck.

2. Neckband: work it now, as written above. For the rolled neck fold the band in half to the inside, so that the wrong sides are together and rnd 10 lies behind rnd 1. With the end of the neckband sew the top of rnd 10 to the back of rnd 1 on the inside, 88 sts to 88 sts, with loose whip stitches, so that the neck still stretches over the head. The neck is then about 1 in (2.5 cm) high.

3. Markers: at each side edge of the back and of the front, place a marker in the end of row 62. The 37 rows from the marker to the shoulder seam, about 8 in (20.5 cm), are half of the armhole.

4. Sleeves: with right sides together, put the middle of the top edge of a sleeve at a shoulder seam and its two ends at the markers. Sew the top edge on: 32 sts of the sleeve to the 37 row ends of the front, and the other 32 sts to the 37 row ends of the back, about 5 sts to every 6 row ends.

5. Sides and sleeves: fold the sweater at the shoulders, right sides together. Sew each sleeve seam from the cuff edge to the underarm and go on down the side seam to the lower edge. At the two ribs the edges are the foundation chain and the last row of a rib: sew them stitch to stitch, 8 at the cuff and 8 at the hem. Between the ribs sew row end to row end. Turn the sweater right side out.

Finishing

- Weave in all the ends. Wash as the yarn label says and lay flat to the measurements to dry.
- To hang it: put about 8 in (20 cm) of thread or narrow ribbon through a space at the top and knot its two ends together.

In all: 4 pieces; 25,262 stitches (672 in each hem rib, 8,148 in the back, 6,804 in the front, 405 in the front, first side of the neck, 405 in the front, second side of the neck, 256 in each cuff rib, 3,426 in each sleeve, 792 in the neckband).

Found a mistake in this pattern? Tell us at flossfield.com, under Make a request.

For your own crochet, gifts and handmade pieces you sell. Do not resell or share this PDF or copies of it.