Santa with a sack of toys

US terms



Finished size
Santa about 8¼ in (21 cm) tall, the sack about 4¾ in (12 cm) tall with the teddy

Skill
Intermediate
20 pieces worked in rounds and rows and sewn together.

Yarn
Medium (4), 7 colors

Hook
3.5 mm (US E-4)

Gauge
20 stitches and 22 rounds to 4 in (10 cm)
In single crochet, in a spiral.

You will need

Yarn A: peach, head and nose	**about 55 yd (50 m), an estimate**
Yarn B: cranberry, several of the pieces	**about 110 yd (101 m), an estimate**
Yarn C: ivory, several of the pieces	**about 125 yd (114 m), an estimate**
Yarn D: charcoal, coat, boot, arm and the details	**about 50 yd (46 m), an estimate**
Yarn E: oatmeal, sack	**about 55 yd (50 m), an estimate**
Yarn F: honey, teddy head, teddy ear and the details	**about 30 yd (27 m), an estimate**
Yarn G: rose, the details	**about 5 yd (5 m), an estimate**

Hook: 3.5 mm (US E-4), or the size that gives you the gauge. Also: toy stuffing, a yarn needle, a stitch marker, pins, scissors and black plastic eyes with washers, two each of 6 mm and 8 mm.

To find how many balls: divide by the length on your yarn's label and round up. Buy them from one dye lot. The estimate is from the stitches of this size at this gauge, with 30 percent added.

Abbreviations

Written in US terms. Where the UK name differs it is given beside the US one.

sc	single crochet (UK dc, double crochet)
sc2tog	single crochet 2 stitches together, through the front loops only: how is under “Before you start” (UK dc2tog, double cro
ch	chain stitch
MR	magic ring
RS	right side
Rnd	round
st	stitch
BLO	back loop only

For your own crochet, gifts and handmade pieces you sell. Do not resell or share this PDF or copies of it.

Special stitches

bobble: [yarn over, insert hook in the stitch, pull up a loop, yarn over, pull through 2 loops] 4 times in the same stitch, yarn over, pull through all 5 loops (United Kingdom: a bobble of 4 trebles). Push it out to the right side. It leaves 1 st for the next row or round.

Gauge

20 stitches and 22 rounds to 4 in (10 cm) in single crochet, in a spiral.

To check it, work a flat circle: 6 sc in a magic ring, then 6 more sc in each round (12, 18, 24, 30, 36). After round 6 it should measure about 2¼ in (5.5 cm) across. The stitches should be tight enough that the stuffing does not show.

Use any hook that gives you this. If you count more stitches than this in 4 in (10 cm), change to a larger hook; if you count fewer, to a smaller one.

Before you start

- Every piece that has rounds is worked in a continuous spiral with the right side facing you: do not join and do not turn. Put the marker in the first stitch of each round and move it up. Square brackets hold a repeat; work it as many times as the line says. The number in parentheses is the count at the end of the round.
- Magic ring: wrap the yarn round two fingers, work round 1 into the loop and pull the tail to close it. Or chain 2 and work round 1 into the first chain.
- Color change: where a line begins "With C," (or another letter), work the last pull-through of the round before it in C. Cut the old yarn and knot the ends on the wrong side.
- Center line: places on a piece are given by round and by stitches from a center line. It is half way round from where the rounds begin. Mark it with a pin or a scrap of yarn as listed here, run it straight from round 1 to the last round by eye, and count out from it along the round, in stitches and half stitches.
- Coat: the center line runs between stitches 24 and 25 of round 8 (48 sts). It faces the front. Head: the center line runs between stitches 24 and 25 of round 10 (48 sts). It faces the front, round 1 at the top.
- Teddy head: the center line runs between stitches 15 and 16 of round 5 (30 sts). It faces the front, round 1 at the top.
- Hat: the center line runs between stitches 24 and 25 of round 14 (48 sts). It faces the front, round 1 at the top.
- Right and left are as you look at the front of the toy. Rounds are counted from the start of each piece.
- Running stitches go in and out along a line.
- In every step of putting it together: where a piece meets or overlaps another, sew through both. Where no tail is left or a tail is too short, sew with a new length of the yarn of the piece you are putting on.
- To work sc2tog, put the hook under the front loop only of each of the next 2 stitches, yarn over, pull through both loops, yarn over, pull through 2 loops.
- For a child under three, or a pet, embroider the eyes instead: satin stitch dots of the same size in D (charcoal).
- The rounds and stitches are the same for every size; the yarn and the hook make the difference. Lengths in the words (tails, ovals, details) are for Standard, the size written here: for another size multiply them by the number in its line.
- Small: fine (2, sport) yarn, 2.25 mm (B-1) hook, 27 sc and 30 rounds to 4 in (10 cm): Santa about 6 in (15 cm) tall, the sack about 3½ in (8.9 cm) tall with the teddy; eyes 4, 6 mm; multiply lengths by 0.74; about 0.74 times the yarn.

For your own crochet, gifts and handmade pieces you sell. Do not resell or share this PDF or copies of it.

- Large: bulky (5, chunky) yarn, 5 mm (H-8) hook, 14 sc and 15.4 rounds to 4 in (10 cm): Santa about 11¾ in (30 cm) tall, the sack about 6¾ in (17 cm) tall with the teddy; eyes 9, 11 mm; multiply lengths by 1.4; about 1.4 times the yarn.
- Jumbo: super bulky (6, plush or velvet) yarn, 6.5 mm (K-10½) hook, 11 sc and 12.1 rounds to 4 in (10 cm): Santa about 15 in (38 cm) tall, the sack about 8½ in (21.5 cm) tall with the teddy; eyes 11, 15 mm; multiply lengths by 1.8; about 1.8 times the yarn.

Instructions

Square brackets [ ] hold a repeat: work what is inside as many times as it says. The count in round brackets at the end of a line is what that line leaves. Tick the box when a round is done. In UK terms sc is double crochet.

Coat

Yarns in order of use: B, cranberry; C, ivory; D, charcoal.

Round 1 is the middle of the base.

☐ **Foundation**	Make a magic ring.	
☐ **Rnd 1 (RS)**	6 sc in MR	**(6 sc)**
☐ **Rnd 2**	2 sc in each st around	**(12 sc)**
☐ **Rnd 3**	**[**sc in next st, 2 sc in next st**] 6 times**	**(18 sc)**
☐ **Rnd 4**	**[**2 sc in next st, sc in next 2 sts**] 6 times**	**(24 sc)**
☐ **Rnd 5**	**[**sc in next 3 sts, 2 sc in next st**] 6 times**	**(30 sc)**
☐ **Rnd 6**	**[**sc in next 2 sts, 2 sc in next st, sc in next 2 sts**] 6 times**	**(36 sc)**
☐ **Rnd 7**	**[**2 sc in next st, sc in next 5 sts**] 6 times**	**(42 sc)**
☐ **Rnd 8**	**[**sc in next 6 sts, 2 sc in next st**] 6 times**	**(48 sc)**
☐ **Rnd 9**	With C, sc in BLO of each st around	**(48 sc)**
☐ **Rnd 10**	**[**sc in next st, bobble in next st**] 24 times**	**(48 sts)**
☐ **Rnd 11**	Sc in each st around	**(48 sc)**
☐ **Rnds 12 to 13**	With B, sc in each st around	**(48 sc)**

A box for each round, 12 to 13: tick them off as you go.

☐ 12 ☐ 13

☐ **Rnd 14**	**[**sc in next 7 sts, sc2tog, sc in next 7 sts**] 3 times**	**(45 sc)**
☐ **Rnd 15**	Sc in each st around	**(45 sc)**
☐ **Rnd 16**	**[**sc2tog, sc in next 13 sts**] 3 times**	**(42 sc)**
☐ **Rnds 17 to 18**	With D, sc in each st around	**(42 sc)**

A box for each round, 17 to 18: tick them off as you go.

☐ 17 ☐ 18

☐ **Rnd 19**	With B, sc in each st around	**(42 sc)**
☐ **Rnd 20**	**[**sc in next 12 sts, sc2tog**] 3 times**	**(39 sc)**

For your own crochet, gifts and handmade pieces you sell. Do not resell or share this PDF or copies of it.

☐ **Rnd 21**	**[**sc in next 5 sts, sc2tog, sc in next 6 sts**] 3 times**	**(36 sc)**
☐ **Rnd 22**	Sc in each st around	**(36 sc)**
☐ **Rnd 23**	**[**sc2tog, sc in next 10 sts**] 3 times**	**(33 sc)**
☐ **Rnd 24**	**[**sc in next 9 sts, sc2tog**] 3 times**	**(30 sc)**
☐ **Rnd 25**	**[**sc in next 4 sts, sc2tog, sc in next 4 sts**] 3 times**	**(27 sc)**
☐ **Rnd 26**	**[**sc2tog, sc in next 7 sts**] 3 times**	**(24 sc)**
☐ **End**	Fasten off, leaving a 22 in (56 cm) tail for sewing. Stuff firmly up to the open edge.	

Head

Yarn A, peach.

☐ **Foundation**	Make a magic ring.	
☐ **Rnd 1 (RS)**	6 sc in MR	**(6 sc)**
☐ **Rnd 2**	2 sc in each st around	**(12 sc)**
☐ **Rnd 3**	**[**sc in next st, 2 sc in next st**] 6 times**	**(18 sc)**
☐ **Rnd 4**	**[**2 sc in next st, sc in next 2 sts**] 6 times**	**(24 sc)**
☐ **Rnd 5**	**[**sc in next 3 sts, 2 sc in next st**] 6 times**	**(30 sc)**
☐ **Rnd 6**	**[**sc in next 2 sts, 2 sc in next st, sc in next 2 sts**] 6 times**	**(36 sc)**
☐ **Rnd 7**	Sc in each st around	**(36 sc)**
☐ **Rnd 8**	**[**2 sc in next st, sc in next 5 sts**] 6 times**	**(42 sc)**
☐ **Rnd 9**	Sc in each st around	**(42 sc)**
☐ **Rnd 10**	**[**sc in next 6 sts, 2 sc in next st**] 6 times**	**(48 sc)**
☐ **Rnds 11 to 15**	Sc in each st around	**(48 sc)**

A box for each round, 11 to 15: tick them off as you go.

☐ 11 ☐ 12 ☐ 13 ☐ 14 ☐ 15

☐ **Rnd 16**	**[**sc in next 3 sts, sc2tog, sc in next 3 sts**] 6 times**	**(42 sc)**
☐ **Rnd 17**	Sc in each st around	**(42 sc)**
☐ **Rnd 18**	**[**sc2tog, sc in next 5 sts**] 6 times**	**(36 sc)**
☐ **Rnd 19**	**[**sc in next 4 sts, sc2tog**] 6 times**	**(30 sc)**
☐ **Rnd 20**	**[**sc in next st, sc2tog, sc in next 2 sts**] 6 times**	**(24 sc)**

Fix the eyes now (see Finishing). Then stuff firmly, and keep adding stuffing until the last round.

☐ **Rnd 21**	**[**sc2tog, sc in next 2 sts**] 6 times**	**(18 sc)**
☐ **Rnd 22**	**[**sc in next st, sc2tog**] 6 times**	**(12 sc)**

For your own crochet, gifts and handmade pieces you sell. Do not resell or share this PDF or copies of it.

☐ **Rnd 23**	**[**sc2tog**] 6 times**	**(6 sc)**
☐ **End**	Fasten off, leaving an 8 in (20 cm) tail. Thread the tail through the front loop of each of the last 6 stitches, pull it tight to close the hole and bury the end inside.	

Boot: make 2

Yarn D, charcoal.

☐ **Foundation**	Make a magic ring.	
☐ **Rnd 1 (RS)**	6 sc in MR	**(6 sc)**
☐ **Rnd 2**	2 sc in each st around	**(12 sc)**
☐ **Rnd 3**	**[**sc in next st, 2 sc in next st, sc in next st**] 4 times**	**(16 sc)**
☐ **Rnd 4**	**[**2 sc in next st, sc in next 7 sts**] 2 times**	**(18 sc)**
☐ **Rnds 5 to 12**	Sc in each st around	**(18 sc)**

A box for each round, 5 to 12: tick them off as you go.

☐ 5 ☐ 6 ☐ 7 ☐ 8 ☐ 9 ☐ 10 ☐ 11 ☐ 12

Stuff firmly now, and keep adding stuffing until the last round.

☐ **Rnd 13**	**[**sc in next 7 sts, sc2tog**] 2 times**	**(16 sc)**
☐ **Rnd 14**	**[**sc in next st, sc2tog, sc in next st**] 4 times**	**(12 sc)**
☐ **Rnd 15**	**[**sc2tog**] 6 times**	**(6 sc)**
☐ **End**	Fasten off, leaving an 8 in (20 cm) tail. Thread the tail through the front loop of each of the last 6 stitches, pull it tight to close the hole and bury the end inside. Shape the stuffed piece with your fingers into an oval, about 1 3/8 in (3.5 cm) wide and 7/8 in (2.2 cm) tall at its widest.	

Hair

Yarn C, ivory.

Worked flat, to and fro in rows, 33 stitches wide at the start. The ch 1 at the start of a row does not count as a stitch.

☐ **Foundation**	With C, ch 34.	
☐ **Row 1 (RS)**	Sc in second ch from hook and in each ch across	**(33 sc)**
☐ **Row 2**	Ch 1, turn, **[**sc in next st, bobble in next st**] 16 times**, sc in next st	**(33 sts)**
☐ **Row 3**	Ch 1, turn, sc in each st across	**(33 sc)**
☐ **Row 4**	Ch 1, turn, **[**sc in next st, bobble in next st**] 16 times**, sc in next st	**(33 sts)**
☐ **Row 5**	Ch 1, turn, sc in each st across	**(33 sc)**
☐ **Row 6**	Ch 1, turn, **[**sc in next st, bobble in next st**] 16 times**, sc in next st	**(33 sts)**
☐ **Row 7**	Ch 1, turn, **[**sc in next 6 sts, sc2tog**] 3 times**, sc in next 7 sts, sc2tog	**(29 sc)**
☐ **Row 8**	Ch 1, turn, **[**sc in next st, bobble in next st**] 14 times**, sc in next st	**(29 sts)**

For your own crochet, gifts and handmade pieces you sell. Do not resell or share this PDF or copies of it.

☐ **Row 9**	Ch 1, turn, sc in next 2 sts, **[**sc2tog, sc in next 5 sts**] 2 times**, sc2tog, sc in next 6 sts, sc2tog, sc in next 3 sts	**(25 sc)**
☐ **End**	Fasten off and weave in the end.	

Beard

Yarn C, ivory.

Worked flat, to and fro in rows, 23 stitches wide at the start. The ch 1 at the start of a row does not count as a stitch.

☐ **Foundation**	With C, ch 24.	
☐ **Row 1 (RS)**	Sc in second ch from hook and in each ch across	**(23 sc)**
☐ **Row 2**	Ch 1, turn, **[**sc in next st, bobble in next st**] 11 times**, sc in next st	**(23 sts)**
☐ **Row 3**	Ch 1, turn, sc in each st across	**(23 sc)**
☐ **Row 4**	Ch 1, turn, **[**sc in next st, bobble in next st**] 11 times**, sc in next st	**(23 sts)**
☐ **Row 5**	Ch 1, turn, sc2tog 2 times, sc in next 15 sts, sc2tog 2 times	**(19 sc)**
☐ **Row 6**	Ch 1, turn, **[**sc in next st, bobble in next st**] 9 times**, sc in next st	**(19 sts)**
☐ **Row 7**	Ch 1, turn, sc2tog 2 times, sc in next 11 sts, sc2tog 2 times	**(15 sc)**
☐ **Row 8**	Ch 1, turn, **[**sc in next st, bobble in next st**] 7 times**, sc in next st	**(15 sts)**
☐ **Row 9**	Ch 1, turn, sc2tog 2 times, sc in next 7 sts, sc2tog 2 times	**(11 sc)**
☐ **Row 10**	Ch 1, turn, **[**sc in next st, bobble in next st**] 5 times**, sc in next st	**(11 sts)**
☐ **Row 11**	Ch 1, turn, sc2tog 2 times, sc in next 3 sts, sc2tog 2 times	**(7 sc)**
☐ **Row 12**	Ch 1, turn, **[**sc in next st, bobble in next st**] 3 times**, sc in next st	**(7 sts)**
☐ **End**	Fasten off and weave in the end.	

Hat

Yarns in order of use: B, cranberry; C, ivory.

☐ **Foundation**	Make a magic ring.	
☐ **Rnd 1 (RS)**	6 sc in MR	**(6 sc)**
☐ **Rnd 2**	**[**sc in next st, 2 sc in next st**] 3 times**	**(9 sc)**
☐ **Rnd 3**	**[**sc in next st, 2 sc in next st, sc in next st**] 3 times**	**(12 sc)**
☐ **Rnd 4**	**[**2 sc in next st, sc in next 3 sts**] 3 times**	**(15 sc)**
☐ **Rnd 5**	**[**sc in next 4 sts, 2 sc in next st**] 3 times**	**(18 sc)**
☐ **Rnd 6**	**[**sc in next 2 sts, 2 sc in next st, sc in next 3 sts**] 3 times**	**(21 sc)**
☐ **Rnd 7**	**[**2 sc in next st, sc in next 6 sts**] 3 times**	**(24 sc)**
☐ **Rnd 8**	**[**sc in next 7 sts, 2 sc in next st**] 3 times**	**(27 sc)**
☐ **Rnd 9**	**[**sc in next 4 sts, 2 sc in next st, sc in next 4 sts**] 3 times**	**(30 sc)**

For your own crochet, gifts and handmade pieces you sell. Do not resell or share this PDF or copies of it.

☐ **Rnd 10**	**[**2 sc in next st, sc in next 9 sts**] 3 times**	**(33 sc)**
☐ **Rnd 11**	**[**sc in next 10 sts, 2 sc in next st**] 3 times**	**(36 sc)**
☐ **Rnd 12**	**[**sc in next 4 sts, 2 sc in next st, sc in next 4 sts**] 4 times**	**(40 sc)**
☐ **Rnd 13**	**[**2 sc in next st, sc in next 9 sts**] 4 times**	**(44 sc)**
☐ **Rnd 14**	**[**sc in next 10 sts, 2 sc in next st**] 4 times**	**(48 sc)**
☐ **Rnd 15**	With C, sc in each st around	**(48 sc)**
☐ **Rnd 16**	**[**sc in next st, bobble in next st**] 24 times**	**(48 sts)**
☐ **Rnd 17**	Sc in each st around	**(48 sc)**
☐ **End**	Fasten off, leaving a 36 in (91 cm) tail for sewing. Stuff the tip lightly, leaving the last 9 rounds empty: they go down over the top of the head.	

Pompom

Yarn C, ivory.

☐ **Foundation**	Make a magic ring.	
☐ **Rnd 1 (RS)**	6 sc in MR	**(6 sc)**
☐ **Rnd 2**	2 sc in each st around	**(12 sc)**
☐ **Rnd 3**	**[**sc in next st, 2 sc in next st, sc in next 2 sts**] 3 times**	**(15 sc)**
☐ **Rnd 4**	**[**2 sc in next st, sc in next 4 sts**] 3 times**	**(18 sc)**
☐ **Rnd 5**	Sc in each st around	**(18 sc)**
☐ **Rnd 6**	**[**sc in next 4 sts, sc2tog**] 3 times**	**(15 sc)**
☐ **Rnd 7**	**[**sc in next st, sc2tog, sc in next 2 sts**] 3 times**	**(12 sc)**
☐ **End**	Fasten off, leaving a 14 in (36 cm) tail for sewing. Stuff firmly up to the open edge.	

Nose

Yarn A, peach.

☐ **Foundation**	Make a magic ring.	
☐ **Rnd 1 (RS)**	6 sc in MR	**(6 sc)**
☐ **Rnd 2**	**[**sc in next st, 2 sc in next st**] 3 times**	**(9 sc)**
☐ **Rnd 3**	Sc in each st around	**(9 sc)**
☐ **End**	Fasten off, leaving a 12 in (30 cm) tail for sewing. Stuff lightly up to the open edge.	

Mustache side: make 2

Yarn C, ivory.

☐ **Foundation**	Make a magic ring.	
☐ **Rnd 1 (RS)**	4 sc in MR	**(4 sc)**

For your own crochet, gifts and handmade pieces you sell. Do not resell or share this PDF or copies of it.

☐ **Rnd 2**	**[**sc in next st, 2 sc in next st**] 2 times**	**(6 sc)**
☐ **Rnd 3**	**[**sc in next st, 2 sc in next st, sc in next st**] 2 times**	**(8 sc)**
☐ **Rnd 4**	**[**2 sc in next st, sc in next 3 sts**] 2 times**	**(10 sc)**
☐ **Rnd 5**	Sc in each st around	**(10 sc)**
☐ **Rnd 6**	**[**sc in next 3 sts, sc2tog**] 2 times**	**(8 sc)**
☐ **Rnd 7**	**[**sc in next st, sc2tog, sc in next st**] 2 times**	**(6 sc)**
☐ **End**	Fasten off, leaving a 10 in (25 cm) tail for sewing. Stuff lightly up to the open edge.	

Arm: make 2

Yarns in order of use: D, charcoal; C, ivory; B, cranberry.

Stuff lightly every few rounds as you go, so that the tube still bends.

☐ **Foundation**	Make a magic ring.	
☐ **Rnd 1 (RS)**	6 sc in MR	**(6 sc)**
☐ **Rnd 2**	**[**2 sc in next st, sc in next st, 2 sc in next st**] 2 times**	**(10 sc)**
☐ **Rnd 3**	**[**sc in next 2 sts, 2 sc in next st, sc in next 2 sts**] 2 times**	**(12 sc)**
☐ **Rnd 4**	Sc in each st around	**(12 sc)**
☐ **Rnd 5**	**[**sc2tog, sc in next 4 sts**] 2 times**	**(10 sc)**
☐ **Rnd 6**	With C, **[**sc in next 4 sts, 2 sc in next st**] 2 times**	**(12 sc)**
☐ **Rnd 7**	**[**sc in next st, bobble in next st**] 6 times**	**(12 sts)**
☐ **Rnds 8 to 16**	With B, sc in each st around	**(12 sc)**

A box for each round, 8 to 16: tick them off as you go.

☐ 8 ☐ 9 ☐ 10 ☐ 11 ☐ 12 ☐ 13 ☐ 14 ☐ 15 ☐ 16

☐ **End**	Fasten off, leaving a 14 in (36 cm) tail for sewing.	

Sack

Yarn E, oatmeal.

Round 1 is the middle of the base.

☐ **Foundation**	Make a magic ring.	
☐ **Rnd 1 (RS)**	6 sc in MR	**(6 sc)**
☐ **Rnd 2**	2 sc in each st around	**(12 sc)**
☐ **Rnd 3**	**[**sc in next st, 2 sc in next st**] 6 times**	**(18 sc)**
☐ **Rnd 4**	**[**2 sc in next st, sc in next 2 sts**] 6 times**	**(24 sc)**
☐ **Rnd 5**	**[**sc in next 3 sts, 2 sc in next st**] 6 times**	**(30 sc)**
☐ **Rnd 6**	**[**sc in next 2 sts, 2 sc in next st, sc in next 2 sts**] 6 times**	**(36 sc)**
☐ **Rnd 7**	**[**2 sc in next st, sc in next 5 sts**] 6 times**	**(42 sc)**

For your own crochet, gifts and handmade pieces you sell. Do not resell or share this PDF or copies of it.

☐ **Rnds 8 to 15**	Sc in each st around	**(42 sc)**

A box for each round, 8 to 15: tick them off as you go.

8 9 10 11 12 13 14 15

☐ **Rnd 16**	**[**sc in next 12 sts, sc2tog**] 3 times**	**(39 sc)**
☐ **Rnd 17**	**[**sc in next 5 sts, sc2tog, sc in next 6 sts**] 3 times**	**(36 sc)**
☐ **Rnd 18**	**[**sc2tog, sc in next 10 sts**] 3 times**	**(33 sc)**
☐ **Rnd 19**	**[**sc in next 9 sts, sc2tog**] 3 times**	**(30 sc)**
☐ **Rnd 20**	**[**sc in next 4 sts, sc2tog, sc in next 4 sts**] 3 times**	**(27 sc)**
☐ **Rnd 21**	Sc in each st around	**(27 sc)**
☐ **Rnd 22**	**[**2 sc in next st, sc in next 8 sts**] 3 times**	**(30 sc)**
☐ **Rnd 23**	**[**sc in next 9 sts, 2 sc in next st**] 3 times**	**(33 sc)**
☐ **End**	Fasten off. To level the edge, draw the end with the needle under both loops of the next st, and weave it in. Stuff the sack firmly up to round 20. The last two rounds are the open mouth and stand out a little.	

Teddy head

Yarn F, honey.

☐ **Foundation**	Make a magic ring.	
☐ **Rnd 1 (RS)**	6 sc in MR	**(6 sc)**
☐ **Rnd 2**	2 sc in each st around	**(12 sc)**
☐ **Rnd 3**	**[**sc in next st, 2 sc in next st**] 6 times**	**(18 sc)**
☐ **Rnd 4**	**[**2 sc in next st, sc in next 2 sts**] 6 times**	**(24 sc)**
☐ **Rnd 5**	**[**sc in next 3 sts, 2 sc in next st**] 6 times**	**(30 sc)**
☐ **Rnds 6 to 11**	Sc in each st around	**(30 sc)**

A box for each round, 6 to 11: tick them off as you go.

6 7 8 9 10 11

☐ **Rnd 12**	**[**sc in next st, sc2tog, sc in next 2 sts**] 6 times**	**(24 sc)**

Fix the eyes now (see Finishing). Then stuff firmly, and keep adding stuffing until the last round.

☐ **Rnd 13**	**[**sc2tog, sc in next 2 sts**] 6 times**	**(18 sc)**
☐ **Rnd 14**	**[**sc in next st, sc2tog**] 6 times**	**(12 sc)**
☐ **Rnd 15**	**[**sc2tog**] 6 times**	**(6 sc)**
☐ **End**	Fasten off, leaving an 8 in (20 cm) tail. Thread the tail through the front loop of each of the last 6 stitches, pull it tight to close the hole and bury the end inside.	

For your own crochet, gifts and handmade pieces you sell. Do not resell or share this PDF or copies of it.

Teddy ear: make 2

Yarn F, honey.

☐ **Foundation**	Make a magic ring.	
☐ **Rnd 1 (RS)**	6 sc in MR	**(6 sc)**
☐ **Rnd 2**	**[**sc in next st, 2 sc in next st**] 3 times**	**(9 sc)**
☐ **Rnd 3**	Sc in each st around	**(9 sc)**
☐ **End**	Fasten off, leaving a 12 in (30 cm) tail for sewing. Do not stuff. Press it flat, so that the last round makes a straight double edge of 4½ stitches. The odd stitch lies at one fold.	

Teddy muzzle

Yarn C, ivory.

☐ **Foundation**	Make a magic ring.	
☐ **Rnd 1 (RS)**	6 sc in MR	**(6 sc)**
☐ **Rnd 2**	2 sc in each st around	**(12 sc)**
☐ **Rnd 3**	Sc in each st around	**(12 sc)**
☐ **End**	Fasten off, leaving a 14 in (36 cm) tail for sewing. Stuff lightly up to the open edge.	

Candy cane

Yarns in order of use: B, cranberry; C, ivory.

Stuff lightly every few rounds as you go, so that the tube still bends.

☐ **Foundation**	Make a magic ring.	
☐ **Rnd 1 (RS)**	5 sc in MR	**(5 sc)**
☐ **Rnd 2**	Sc in each st around	**(5 sc)**
☐ **Rnds 3 to 4**	With C, sc in each st around	**(5 sc)**

A box for each round, 3 to 4: tick them off as you go.

☐ 3 ☐ 4

☐ **Rnds 5 to 6**	With B, sc in each st around	**(5 sc)**

A box for each round, 5 to 6: tick them off as you go.

☐ 5 ☐ 6

☐ **Rnds 7 to 8**	With C, sc in each st around	**(5 sc)**

A box for each round, 7 to 8: tick them off as you go.

☐ 7 ☐ 8

☐ **Rnds 9 to 10**	With B, sc in each st around	**(5 sc)**

A box for each round, 9 to 10: tick them off as you go.

☐ 9 ☐ 10

For your own crochet, gifts and handmade pieces you sell. Do not resell or share this PDF or copies of it.

☐ **Rnds 11 to 12** With C, sc in each st around **(5 sc)**

A box for each round, 11 to 12: tick them off as you go.

11 12

☐ **Rnds 13 to 14** With B, sc in each st around **(5 sc)**

A box for each round, 13 to 14: tick them off as you go.

13 14

☐ **Rnds 15 to 16** With C, sc in each st around **(5 sc)**

A box for each round, 15 to 16: tick them off as you go.

15 16

☐ **Rnds 17 to 18** With B, sc in each st around **(5 sc)**

A box for each round, 17 to 18: tick them off as you go.

17 18

☐ **End** Fasten off, leaving an 8 in (20 cm) tail for sewing.

Sack cord

Yarn B, cranberry.

☐ **Foundation** Make a magic ring.

☐ **Rnd 1 (RS)** 4 sc in MR **(4 sc)**

☐ **Rnds 2 to 35** Sc in each st around **(4 sc)**

A box for each round, 2 to 35: tick them off as you go.

2 3 4 5 6 7 8 9 10 11 12 13 14 15 16 17 18 19 20 21 22 23 24 25 26 27 28 29 30 31 32 33 34 35

☐ **End** Fasten off, leaving a 20 in (51 cm) tail for sewing. Do not stuff.

Assembly

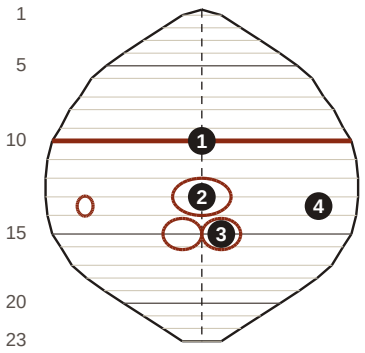

Head: 1 hat, 2 nose, 3 mustache sides, 4 cheeks

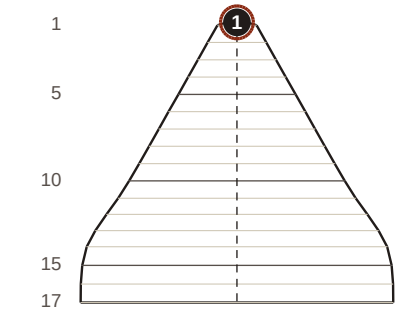

Hat: 1 pompom

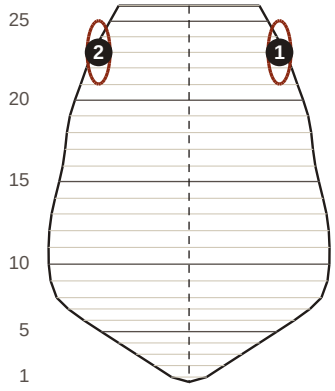

Coat: 1 arm, 2 arm

For your own crochet, gifts and handmade pieces you sell. Do not resell or share this PDF or copies of it.

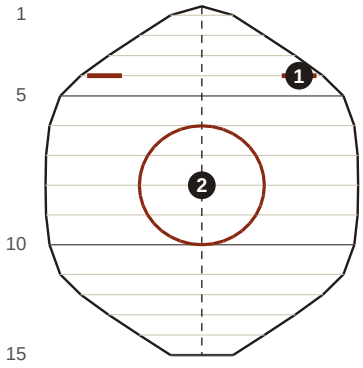

Teddy head: 1 teddy ears, 2 teddy muzzle

Each line is a round, counted as the rounds are worked. The upright broken line is the center line. A place with a broken edge is on the far side.

1. Set the head on the open edge of the coat (24 sts), center lines in line: the edge lies on round 20 of the head (24 sts). With the tail of the coat, sew every stitch of the edge to the head, and top up the stuffing in the neck before the last stitches so that the head does not wobble.

2. Sew the two boots under the base of the coat, side by side, each lying from front to back with its round 1 to the front: their inner sides touch along the middle, and rounds 1 to 3 of each stand out in front of the edge of the base. Sew each boot to the base where the two touch, in an oval of about 24 stitches, going round twice. Santa stands on the boots.

3. Lay the hair round the back of the head, right side out, its foundation chain along round 10 of the head: the middle of the chain is on the line opposite the center line, and its two ends are about 9 stitches from the center line, one on each side. The last row (25 sts) lies on about round 18 of the head. With a new length of C (ivory), sew the chain, the ends of the rows at both sides and the last row to the head.

4. Lay the beard across the front of the head, right side out, its foundation chain along round 15 of the head: the middle of the chain is on the center line, and its two ends lie on the front edges of the hair. With a new length of C (ivory), sew the chain and the ends of the first 4 rows on each side to the head and the hair. The rest lies on the coat: catch its last row to the coat with two stitches.

5. Set the hat on the head with the center lines in line: its open edge (48 sts) lies on round 10 of the head (48 sts). Sew it down all the way round, topping up the stuffing before the last stitches. Then work running stitches with a new length of B (cranberry) up the right side of the hat from round 12 to round 3, draw them up until the tip bends over to the right, and fasten off.

6. Pin the pompom to the hat: the middle of the open edge lies over the middle of round 1 of the hat. The edge (12 sts) lies all the way round on about round 3. It points to the right. Sew all the way round with the tail, adding a little stuffing before the last few stitches if the edge is still soft.

7. Pin the nose to the head: the middle of the open edge lies on round 13, on the center line. The edge (9 sts) covers about rounds 12 to 14 of the head. It points forward. Sew all the way round with the tail, adding a little stuffing before the last few stitches if the edge is still soft.

8. Pin the two mustache sides to the head: the middle of each open edge lies on round 15, one to each side, 1 stitch from the center line (2 stitches apart). The edge (6 sts) covers about rounds 14 to 16 of the head. They point out to the side and forward. Sew all the way round with the tail, adding a little stuffing before the last few stitches if the edge is still soft. They lie on the beard: sew through the beard and the head.

9. Pin one arm to the coat: the middle of the open edge lies on round 23, 6½ stitches to the right of the center line. The edge (12 sts) covers about rounds 21 to 25 of the coat. It points to the right, then curves until its tip points up and to the right. Bend it as you pin it and hold the curve with a few running stitches along its inner side, drawn up a little. Sew all the way round with the tail, adding a little stuffing before the last few stitches if the edge is still soft.

For your own crochet, gifts and handmade pieces you sell. Do not resell or share this PDF or copies of it.

10. Pin one arm to the coat: the middle of the open edge lies on round 23, 6½ stitches to the left of the center line. The edge (12 sts) covers about rounds 21 to 25 of the coat. It points to the left and down. Sew all the way round with the tail, adding a little stuffing before the last few stitches if the edge is still soft.

11. Set the teddy head in the mouth of the sack, its closed hole down; any side of the sack may be the front, and the center line of the teddy head is in front. The last round of the sack (33 sts) lies round the teddy head on round 11 (30 sts), and rounds 12 to 15 of the teddy head are inside. Leave 4 stitches of the last round of the sack open at the left for the candy cane, and sew the rest of that round to the teddy head, eased to fit.

12. Pin the two teddy ears to the teddy head: the middle of each flat edge lies on round 4, one to each side, 5 stitches from the center line (10 stitches apart). The flat edge runs along the round, half of it on each side of that place. They point up and out to the side. Sew through both layers of the 4½-stitch edge with the tail.

13. Pin the teddy muzzle to the teddy head: the middle of the open edge lies on round 8, on the center line. The edge (12 sts) covers about rounds 6 to 10 of the teddy head. It points forward. Sew all the way round with the tail, adding a little stuffing before the last few stitches if the edge is still soft.

14. Push the open end of the candy cane down through the gap at the left of the teddy head, so that its last four rounds are inside the sack. Sew it to the last round of the sack and to the teddy head where it touches them, all the way round, so that the gap is closed. Bend the first ten rounds over to the left in a hook, and hold the bend with running stitches along its inner side, drawn up.

15. Lay the sack cord round the sack over round 21, easing it to fit, meet its two ends at the back and sew them together. Sew it down along its whole inner edge.

16. Stand the sack beside Santa, to the left as you look at him, so that the mitten of his lower arm lies in front of it, on the sack cord. If you like, sew the mitten to the cord with two stitches; otherwise the sack stands by itself.

Finishing

- Put in the plastic eyes when the words of a piece say so, or embroider eyes in the same places with the other details. Embroider with one strand of yarn and the yarn needle when the pieces round the place are sewn on; begin and end each strand inside the toy. Satin stitch is straight stitches side by side until the shape is filled.
- Belt buckle: with F (honey), in satin stitch, a small block about ½ in (13 mm) wide and 3/8 in (10 mm) tall, its middle on the coat between rounds 17 and 18, on the center line.
- Eyes: black plastic eyes, one to each side of the center line. Santa: the 8 mm eyes, on the head between rounds 12 and 13, 3½ stitches from the center line (7 stitches apart). Teddy: the 6 mm eyes, on the teddy head on round 6, 3 stitches from the center line (6 stitches apart).
- Cheeks: with G (rose), in satin stitch, an oval about ¼ in (6 mm) wide and 3/16 in (5 mm) tall, its middle on the head between rounds 13 and 14, one to each side, 6½ stitches from the center line (13 stitches apart).
- Eyebrows: with C (ivory), in satin stitch, an oval about 5/16 in (8 mm) wide and 1/8 in (3 mm) tall, its middle on the head on round 11, one to each side, 4 stitches from the center line (8 stitches apart).
- Teddy nose: with D (charcoal), in satin stitch, an oval about 3/16 in (5 mm) wide and 1/8 in (3 mm) tall, its middle on the teddy muzzle, centered, ¼ in (6 mm) above the middle of the teddy muzzle.
- Weave every tail through the toy and trim it. For a toy that will be played with, go round each seam a second time with a new length of yarn. Check the seams and small parts from time to time.

In all: 20 pieces; 5,112 stitches.

Found a mistake in this pattern? Tell us at flossfield.com, under Make a request.

For your own crochet, gifts and handmade pieces you sell. Do not resell or share this PDF or copies of it.