Plus size V-neck cardigan

2X, to fit bust 49 in (124.5 cm) · US terms



Finished size

About 54¼ in (138 cm) at the bust and about 25¾ in (65.5 cm) long

To fit a bust of 49 in (124.5 cm)

Skill

Easy

Basic stitches, simple shaping and seams

Yarn

Medium (4)

Hook

5.5 mm (US I-9)

Gauge

13 stitches and 11 rows to 4 in (10 cm)

In half double crochet (UK half treble).

What you need

Yarn: any one color (teal in the picture), medium (4) **about 1,775 yd (1,623 m), an estimate**

By weight: about 890 g, an estimate, where 100 g is 200 yd (183 m).

Hook: 5.5 mm (US I-9), or the size that gives you the gauge. Also: yarn needle, scissors, tape measure and stitch markers.

To find how many balls: divide by the length on your yarn's label and round up. Buy them from one dye lot. The estimate is from the stitches of this size at this gauge.

Sizes

Size	To fit bust	Yarn, an estimate	Bust, fronts laid side by side	Length	Armhole depth	Sleeve	Upper sleeve	Back neck
XS	29 in (73.5 cm)	about 1,175 yd (1,074 m)	34¾ in (88.5 cm)	24¼ in (61.5 cm)	7¼ in (18.5 cm)	17¾ in (45 cm)	14¾ in (37.5 cm)	6¾ in (17 cm)
S	33 in (84 cm)	about 1,250 yd (1,143 m)	37¾ in (96 cm)	24¼ in (61.5 cm)	7¼ in (18.5 cm)	17¾ in (45 cm)	14¾ in (37.5 cm)	6¾ in (17 cm)
M	37 in (94 cm)	about 1,350 yd (1,234 m)	42 in (106.5 cm)	25 in (63.5 cm)	8 in (20.5 cm)	17 in (43 cm)	16 in (40.5 cm)	7½ in (19 cm)
L	41 in (104 cm)	about 1,500 yd (1,372 m)	45¼ in (115 cm)	25 in (63.5 cm)	8¾ in (22 cm)	17 in (43 cm)	17¼ in (44 cm)	7½ in (19 cm)

For your own crochet, gifts and handmade pieces you sell. Do not resell or share this PDF or copies of it.

1X	45 in (114.5 cm)	about 1,600 yd (1,463 m)	50 in (127 cm)	25 in (63.5 cm)	8¾ in (22 cm)	17 in (43 cm)	17¼ in (44 cm)	7½ in (19 cm)
2X (this file)	**49 in (124.5 cm)**	**about 1,775 yd (1,623 m)**	**54¼ in (138 cm)**	**25¾ in (65.5 cm)**	**9½ in (24 cm)**	**17 in (43 cm)**	**19 in (48.5 cm)**	**7½ in (19 cm)**
3X	53 in (134.5 cm)	about 1,825 yd (1,669 m)	57½ in (146 cm)	25¾ in (65.5 cm)	10¼ in (26 cm)	16¼ in (41.5 cm)	20¼ in (51.5 cm)	7½ in (19 cm)
4X	57 in (145 cm)	about 1,950 yd (1,783 m)	61¾ in (157 cm)	25¾ in (65.5 cm)	10¼ in (26 cm)	16¼ in (41.5 cm)	20¼ in (51.5 cm)	7½ in (19 cm)
5X	61 in (155 cm)	about 2,125 yd (1,943 m)	66¾ in (169.5 cm)	26½ in (67.5 cm)	11 in (28 cm)	14¾ in (37.5 cm)	21½ in (54.5 cm)	7½ in (19 cm)

Schematic

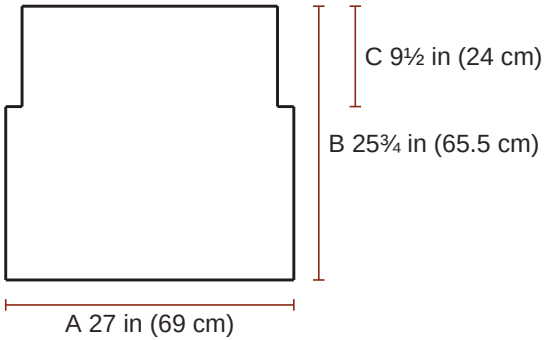

Back
A half the bust
B the length
C the armhole

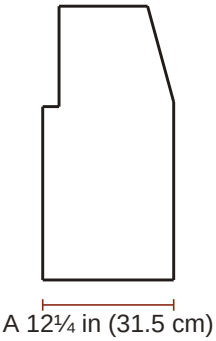

Front (make 2)
A each front

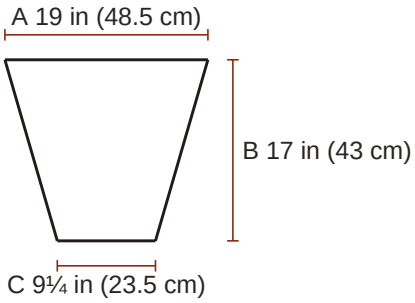

Sleeve (make 2)
A the top of the sleeve, opened flat
B the sleeve
C around the cuff

Gauge

13 stitches and 11 rows to 4 in (10 cm) in half double crochet.

> **The swatch.** A test piece to measure and pull out. It is not the start of the pattern. Ch 21; begin in the 2nd ch from the hook and work 16 rows of half double crochet on 20 sts, about 6¼ in (16 cm) wide and 5¾ in (14.5 cm) high, and measure 4 in (10 cm) in the middle. Use a larger hook if your swatch is small, a smaller one if it is large. Ribs: worked sideways, 14 rows and 13 sts to 4 in (10 cm), so a rib of 6 sts is about 1¾ in (4.5 cm) deep.

Notes

- The finished bust is from 4¼ in (11 cm) to 5¾ in (14.5 cm) wider than the body measurement, by the size. It is meant to be worn open. Choose by the finished measurement you like; no fit is promised beyond the measurements given.
- The turning chain (ch 1 for single and half double crochet) never counts as a stitch. Work the first stitch of every row into the first stitch, at the base of the turning chain.

For your own crochet, gifts and handmade pieces you sell. Do not resell or share this PDF or copies of it.

- Odd-numbered rows are right side rows (for the fronts, go by the words at their head). Mark the right side of each piece with a stitch marker or a scrap of yarn.
- A decrease counts as one stitch.
- The ribs are worked sideways in back-loop single crochet (UK: double crochet). The body and sleeves are worked up from a long edge, one stitch in the end of each rib row. The rib draws in: it is a little narrower than the body above it.
- Stitches worked evenly along row ends: about 7 sc in every 6 rows.
- Sew every seam with the yarn needle and the same yarn.
- In back loop only: insert the hook under the loop of the stitch that is farther from you, and leave the nearer loop free.

Instructions

2X, to fit bust 49 in (124.5 cm). US terms.

ch chain, **sc** single crochet (UK double crochet), **hdc** half double crochet (UK half treble), **st** stitch.
RS right side, the one that shows.
(6 sc): the stitches you have when the row is done. **How to read a pattern**.

Special stitches

sc2tog (single crochet 2 stitches together (UK double crochet 2 together)): Insert the hook in the next stitch and pull up a loop, insert the hook in the following stitch and pull up a loop (3 loops on the hook); yarn over and pull through all 3 loops.

hdc2tog (half double crochet 2 stitches together (UK half treble 2 together)): [yarn over, insert the hook in the next stitch and pull up a loop] twice (5 loops on the hook); yarn over and pull through all 5 loops.

Hem rib

☐ **Foundation**	Ch 7.	
☐ **Row 1 (RS)**	Sc in 2nd ch from hook and in each ch across	(6 sc)
☐ **Rows 2 to 88**	Ch 1, turn; sc in back loop only of each st across	(6 sc)

2 3 4 5 6 7 8 9 10 11 12 13 14 15 16 17 18 19 20 21 22 23 24 25 26 27 28 29
30 31 32 33 34 35 36 37 38 39 40 41 42 43 44 45 46 47 48 49 50 51 52 53 54 55 56 57
58 59 60 61 62 63 64 65 66 67 68 69 70 71 72 73 74 75 76 77 78 79 80 81 82 83 84 85
86 87 88

☐ **End**	Fasten off.	

Back

☐ **Foundation**	Hold the hem rib with one long edge at the top. Join the yarn at the right-hand end of that edge; ch 1, sc in the end of each rib row across (88 sc). This is row 1, and a right side row.	
☐ **Rows 2 to 40**	Ch 1, turn; hdc in each st across	(88 hdc)

2 3 4 5 6 7 8 9 10 11 12 13 14 15 16 17 18 19 20 21 22 23 24 25 26 27 28 29
30 31 32 33 34 35 36 37 38 39 40

☐ **Row 41**	Fasten off and turn. Skip the first 5 sts and join the yarn in the next st; ch 1, and beginning in that st, hdc in next 78 sts, leave the last 5 sts unworked	(78 hdc)

For your own crochet, gifts and handmade pieces you sell. Do not resell or share this PDF or copies of it.

☐ **Rows 42 to 66**	Ch 1, turn; hdc in each st across	(78 hdc)

42 43 44 45 46 47 48 49 50 51 52 53 54 55 56 57 58 59 60 61 62 63 64 65 66

☐ **End**	The back measures about 27 in (68.5 cm) wide and 25¾ in (65.5 cm) long, and 24 in (61 cm) across above the armholes. Fasten off.	

Front hem rib: make 2, one for each front

☐ **Foundation**	Ch 7.	
☐ **Row 1 (RS)**	Sc in 2nd ch from hook and in each ch across	(6 sc)
☐ **Rows 2 to 40**	Ch 1, turn; sc in back loop only of each st across	(6 sc)

2 3 4 5 6 7 8 9 10 11 12 13 14 15 16 17 18 19 20 21 22 23 24 25 26 27 28 29
30 31 32 33 34 35 36 37 38 39 40

☐ **End**	Fasten off.	

Front: make 2, alike

☐ **Foundation**	Both fronts are worked from these rows. With the odd-numbered rows on the outside the piece is the left front as worn; turn the second piece over, so that its odd-numbered rows lie on the inside, and it is the right front. When a front is done, mark its outside: in the front edging and the finishing 'right side' means the outside. Hold a front hem rib with one long edge at the top. Join the yarn at the right-hand end of that edge; ch 1, sc in the end of each rib row across (40 sc). This is row 1.	
☐ **Rows 2 to 40**	Ch 1, turn; hdc in each st across	(40 hdc)

2 3 4 5 6 7 8 9 10 11 12 13 14 15 16 17 18 19 20 21 22 23 24 25 26 27 28 29
30 31 32 33 34 35 36 37 38 39 40

☐ **Row 41**	Fasten off and turn. Skip the first 5 sts and join the yarn in the next st; ch 1, and beginning in that st, hdc in next 35 sts	(35 hdc)
☐ **Row 42**	Ch 1, turn; hdc in each st across	(35 hdc)
☐ **Row 43**	Ch 1, turn; hdc in each st across to last 2 sts, hdc2tog. The neck edge is at the end of this row	(34 hdc)
☐ **Rows 44 to 45**	Ch 1, turn; hdc in each st across	(34 hdc)

44 45

☐ **Row 46**	Ch 1, turn; hdc2tog, hdc in each st across	(33 hdc)
☐ **Rows 47 to 48**	Ch 1, turn; hdc in each st across	(33 hdc)

47 48

☐ **Rows 49 to 66**	Repeat Rows 43 to 48, 3 more times (31, 29, 27 hdc at the ends of the repeats)	(27 hdc)

49 50 51 52 53 54 55 56 57 58 59 60 61 62 63 64 65 66

☐ **End**	The front measures about 12¼ in (31 cm) wide above the hem rib; the front edging adds about 1 3/8 in (3.5 cm) to it later (the bust in the size list counts it). The 27 sts left at the top are the shoulder. Fasten off.	

For your own crochet, gifts and handmade pieces you sell. Do not resell or share this PDF or copies of it.

Cuff rib: make 2

☐ **Foundation**	Ch 7.	
☐ **Row 1 (RS)**	Sc in 2nd ch from hook and in each ch across	(6 sc)
☐ **Rows 2 to 30**	Ch 1, turn; sc in back loop only of each st across	(6 sc)

2 3 4 5 6 7 8 9 10 11 12 13 14 15 16 17 18 19 20 21 22 23 24 25 26 27 28 29 30

☐ **End**	Fasten off.	

Sleeve: make 2

☐ **Foundation**	Hold a cuff rib with one long edge at the top. Join the yarn at the right-hand end of that edge; ch 1, sc in the end of each rib row across (30 sc). This is row 1, and a right side row.	
☐ **Row 2**	Ch 1, turn; hdc in each st across	(30 hdc)
☐ **Row 3**	Ch 1, turn; 2 hdc in first st, hdc in each st across to last st, 2 hdc in last st	(32 hdc)
☐ **Rows 4 to 33**	Repeat Rows 2 and 3, 15 more times (34, 36, 38, 40, 42, 44, 46, 48, 50, 52, 54, 56, 58, 60, 62 hdc at the ends of the repeats)	(62 hdc)

4 5 6 7 8 9 10 11 12 13 14 15 16 17 18 19 20 21 22 23 24 25 26 27 28 29 30 31 32 33

☐ **Rows 34 to 42**	Ch 1, turn; hdc in each st across	(62 hdc)

34 35 36 37 38 39 40 41 42

☐ **End**	The sleeve measures about 19 in (48.5 cm) across the top and 17 in (43 cm) long. Fasten off.	

Front edging

☐ **Foundation**	Work this at step 4 of Assembly. With the right side facing, join the yarn at the lower corner of the right front edge (as worn); ch 1, sc in each of the 6 sts along the end of the front hem rib, 78 sc evenly along the 66 row ends of the right front, up to the shoulder, sc in each of the 24 sts of the back neck, 78 sc evenly along the 66 row ends of the left front, down to the hem, sc in each of the 6 sts along the end of the front hem rib; 192 sc in all. This is row 1.	
☐ **Row 2**	Ch 1, turn; sc in next 82 sts, sc2tog twice, sc in next 20 sts, sc2tog twice, sc in next 82 sts	(188 sc)
☐ **Row 3**	Ch 1, turn; sc in each st across	(188 sc)
☐ **Row 4**	Ch 1, turn; sc in next 81 sts, sc2tog twice, sc in next 18 sts, sc2tog twice, sc in next 81 sts	(184 sc)
☐ **Row 5**	Ch 1, turn; sc in each st across	(184 sc)
☐ **End**	The decreases fall at the two shoulder seams and turn the corners, so that the edging lies flat. Fasten off.	

For your own crochet, gifts and handmade pieces you sell. Do not resell or share this PDF or copies of it.

Assembly

1. Shoulders: lay the fronts on the back with right sides together and the side edges level. Sew the 27 shoulder sts of each front to the 27 sts at each end of the back, and leave the middle 24 sts of the back open for the neck.

2. Sleeves: with right sides together, put the middle of the top edge of a sleeve at each shoulder seam. Sew the top edge to the straight edges of the armhole, front and back, and sew the top 1½ in (4 cm) of each side edge of the sleeve to the 5 sts left at the underarm.

3. Sides and sleeves: sew each side seam from the underarm down to the hem, and each sleeve seam from the underarm to the cuff edge.

4. Front edging: work it now, as written above.

Finishing

- Weave in all the ends. Wash as the yarn label says and lay flat to the measurements to dry.

In all: 5 pieces; 17,166 stitches (528 in the hem rib, 5,460 in the back, 240 in each front hem rib, 2,317 in each front, 180 in each cuff rib, 2,480 in each sleeve, 744 in the front edging).

Found a mistake in this pattern? Tell us at flossfield.com, under Make a request.

For your own crochet, gifts and handmade pieces you sell. Do not resell or share this PDF or copies of it.