Women's V-neck sweater

Size M · US terms



Finished size

About 41¾ in (106 cm) at the bust and about 22 in (56 cm) long

To fit a bust of 37 in (94 cm)

Skill

Easy

Flat pieces in half double crochet with simple shaping at the neck and along the sleeves, then straight seams.

Yarn

Medium (4), 2 colors

Hook

5.5 mm (US I-9)

Gauge

13 stitches and 11 rows to 4 in (10 cm)

In half double crochet.

You will need

Yarn A: denim, the body and sleeves **about 1,125 yd (1,029 m), an estimate**

Yarn B: ivory, the ribs and the neckband **about 110 yd (101 m), an estimate**

Hook: 5.5 mm (US I-9). Also: yarn needle, scissors, tape measure and stitch markers.

To find how many balls: divide by the length on your yarn's label and round up. The estimate is from the stitches of this size at this gauge.

Sizes

Size	To fit bust	Bust	Length	Armhole depth	Sleeve	Upper sleeve	Back neck	Yarn, an estimate
XS	29 in (73.5 cm)	34½ in (87.5 cm)	22 in (56 cm)	7¼ in (18.5 cm)	17¾ in (45 cm)	14¾ in (37.5 cm)	9¼ in (23.5 cm)	about 1,100 yd (1,005 m)
Size S	33 in (84 cm)	38¼ in (97 cm)	22 in (56 cm)	7¼ in (18.5 cm)	17¾ in (45 cm)	14¾ in (37.5 cm)	9¼ in (23.5 cm)	about 1,180 yd (1,079 m)
Size M (this file)	**37 in (94 cm)**	**41¾ in (106 cm)**	**22 in (56 cm)**	**8 in (20.5 cm)**	**17 in (43 cm)**	**16 in (40.5 cm)**	**9¼ in (23.5 cm)**	**about 1,235 yd (1,130 m)**
Size L	41 in (104 cm)	45½ in (115.5 cm)	22¾ in (58 cm)	8¾ in (22 cm)	17 in (43 cm)	17¼ in (44 cm)	9¼ in (23.5 cm)	about 1,395 yd (1,276 m)
1X	45 in (114.5 cm)	50½ in (128.5 cm)	22¾ in (58 cm)	8¾ in (22 cm)	17 in (43 cm)	17¼ in (44 cm)	9¼ in (23.5 cm)	about 1,480 yd (1,353 m)

For your own crochet, gifts and handmade pieces you sell. Do not resell or share this PDF.

2X	49 in (124.5 cm)	54¼ in (138 cm)	22¾ in (58 cm)	9½ in (24 cm)	17 in (43 cm)	19 in (48.5 cm)	9¼ in (23.5 cm)	about 1,610 yd (1,472 m)
3X	53 in (134.5 cm)	57¾ in (146.5 cm)	23½ in (59.5 cm)	10¼ in (26 cm)	16¼ in (41.5 cm)	20¼ in (51.5 cm)	9¾ in (25 cm)	about 1,715 yd (1,568 m)
4X	57 in (145 cm)	61½ in (156 cm)	23½ in (59.5 cm)	10¼ in (26 cm)	16¼ in (41.5 cm)	20¼ in (51.5 cm)	9¾ in (25 cm)	about 1,800 yd (1,646 m)
5X	61 in (155 cm)	66½ in (169 cm)	23½ in (59.5 cm)	11 in (28 cm)	14¾ in (37.5 cm)	21½ in (54.5 cm)	9¾ in (25 cm)	about 1,930 yd (1,765 m)

Schematic

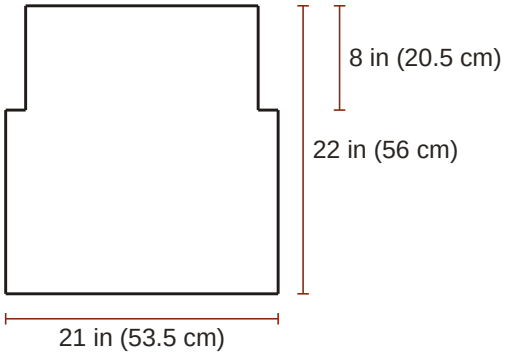

Back

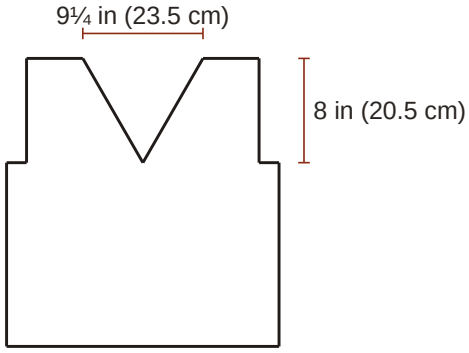

Front

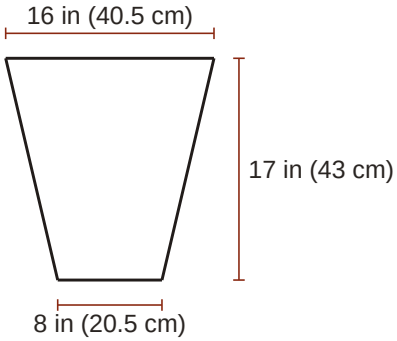

Sleeve (make 2)

Abbreviations

Written in US terms. Where the UK name differs it is given beside the US one.

ch	chain
sl st	slip stitch (UK ss, slip stitch)
sc	single crochet (UK dc, double crochet)
hdc	half double crochet (UK htr, half treble)
st	stitch
rnd	round
RS	right side

For your own crochet, gifts and handmade pieces you sell. Do not resell or share this PDF.

Special stitches

sc2tog (single crochet 2 stitches together (UK double crochet 2 together)): Insert the hook in the next stitch and pull up a loop, insert the hook in the following stitch and pull up a loop (3 loops on the hook); yarn over and pull through all 3 loops. It leaves 1 sc2tog for the next row.

hdc2tog (half double crochet 2 stitches together (UK half treble 2 together)): [Yarn over, insert the hook in the next stitch and pull up a loop] twice (5 loops on the hook); yarn over and pull through all 5 loops. It leaves 1 hdc2tog for the next row.

Gauge

13 stitches and 11 rows to 4 in (10 cm) in half double crochet.

Ribs: worked sideways, 14 rows and 13 sts to 4 in (10 cm), so a rib of 6 sts is about 1¾ in (4.5 cm) deep.

> **The swatch.** A test piece to measure and pull out. It is not the start of the pattern. Ch 21; begin in the 2nd ch from the hook and work 16 rows of half double crochet on 20 sts, about 6¼ in (16 cm) wide and 5¾ in (14.5 cm) high, and measure 4 in (10 cm) in the middle. Use a larger hook if your swatch is small, a smaller one if it is large. Ribs: worked sideways, 14 rows and 13 sts to 4 in (10 cm), so a rib of 6 sts is about 1¾ in (4.5 cm) deep.

Before you start

- Women's sizes, XS to 5X.
- The finished bust is from 4½ in (11.5 cm) to 5½ in (14 cm) wider than the body measurement, by the size. Choose by the finished measurement you like; no fit is promised beyond the measurements given.
- In back loop only: insert the hook under the loop of the stitch that is farther from you, and leave the nearer loop free.
- The turning chain (ch 1 for single and half double crochet) never counts as a stitch. Work the first stitch of every row into the first stitch, at the base of the turning chain.
- The chain at the start of a round never counts as a stitch. Work the first stitch of the round into the stitch at its base, where the round was joined.
- Odd-numbered rows are right side rows. Mark the right side of each piece with a stitch marker or a scrap of yarn.
- A decrease counts as one stitch.
- The ribs are worked sideways in back-loop single crochet (UK: double crochet). The body and sleeves are worked up from a long edge, one stitch in the end of each rib row. The rib draws in: it is a little narrower than the body above it.
- Stitches worked evenly along row ends: about 7 sc in every 6 rows.
- Sew every seam with the yarn needle and yarn A.

For your own crochet, gifts and handmade pieces you sell. Do not resell or share this PDF.

Instructions

Chosen: Size M. The count in round brackets at the end of a line is what that line leaves. Tick the box when a row is done. In UK terms sl st is slip stitch, sc is double crochet and hdc is half treble.

Hem rib: make 2, one for the back and one for the front

Yarn B, ivory.

☐ **Foundation**	With yarn B, ch 7.	
☐ **Row 1 (RS)**	Sc in 2nd ch from hook and in each ch across	**(6 sc)**
☐ **Rows 2 to 68**	Ch 1, turn; sc in back loop only of each st across	**(6 sc)**

A box for each row, 2 to 68: tick them off as you go.

2 3 4 5 6 7 8 9 10 11 12 13 14 15 16 17 18 19 20 21 22 23 24 25 26 27 28 29 30
31 32 33 34 35 36 37 38 39 40 41 42 43 44 45 46 47 48 49 50 51 52 53 54 55 56 57 58 59
60 61 62 63 64 65 66 67 68

☐ **End**	Fasten off.	

Back

Yarn A, denim.

☐ **Foundation**	Hold a hem rib with one long edge at the top. Join yarn A at the right-hand end of that edge.	
☐ **Row 1 (RS)**	Ch 1, sc in the end of each rib row across	**(68 sc)**
☐ **Rows 2 to 34**	Ch 1, turn; hdc in each st across	**(68 hdc)**

A box for each row, 2 to 34: tick them off as you go.

2 3 4 5 6 7 8 9 10 11 12 13 14 15 16 17 18 19 20 21 22 23 24 25 26 27 28 29 30
31 32 33 34

☐ **Row 35**	Fasten off and turn. Skip the first 5 sts and join yarn A in the next st; ch 1, and beginning in that st, hdc in next 58 sts, leave the last 5 sts unworked	**(58 hdc)**
☐ **Rows 36 to 56**	Ch 1, turn; hdc in each st across	**(58 hdc)**

A box for each row, 36 to 56: tick them off as you go.

36 37 38 39 40 41 42 43 44 45 46 47 48 49 50 51 52 53 54 55 56

☐ **End**	The back measures about 21 in (53.5 cm) wide and 22 in (56 cm) long, and 17¾ in (45 cm) across above the armholes. Fasten off.	

Front

Yarn A, denim.

☐ **Foundation**	Hold a hem rib with one long edge at the top. Join yarn A at the right-hand end of that edge.	
☐ **Row 1 (RS)**	Ch 1, sc in the end of each rib row across	**(68 sc)**
☐ **Rows 2 to 34**	Ch 1, turn; hdc in each st across	**(68 hdc)**

A box for each row, 2 to 34: tick them off as you go.

2 3 4 5 6 7 8 9 10 11 12 13 14 15 16 17 18 19 20 21 22 23 24 25 26 27 28 29 30
31 32 33 34

For your own crochet, gifts and handmade pieces you sell. Do not resell or share this PDF.

☐ **Row 35**	Fasten off and turn. Skip the first 5 sts and join yarn A in the next st; ch 1, and beginning in that st, hdc in next 58 sts, leave the last 5 sts unworked	**(58 hdc)**
☐ **Row 36**	Ch 1, turn; hdc in each st across	**(58 hdc)**
☐ **End**	Do not fasten off.	

Front, first side of the neck

Yarn A, denim.

☐ **Foundation**	Go on from row 36 of the front. This is the left side as worn. The neck edge is at the end of the next row.	
☐ **Row 37**	Ch 1, turn; hdc in next 27 sts, hdc2tog, leave the last 29 sts unworked	**(28 hdc)**
☐ **Row 38**	Ch 1, turn; hdc2tog, hdc in each st across	**(27 hdc)**
☐ **Row 39**	Ch 1, turn; hdc in each st across to last 2 sts, hdc2tog	**(26 hdc)**
☐ **Row 40**	Ch 1, turn; hdc2tog, hdc in each st across	**(25 hdc)**
☐ **Row 41**	Ch 1, turn; hdc in each st across to last 2 sts, hdc2tog	**(24 hdc)**
☐ **Row 42**	Ch 1, turn; hdc2tog, hdc in each st across	**(23 hdc)**
☐ **Row 43**	Ch 1, turn; hdc in each st across to last 2 sts, hdc2tog	**(22 hdc)**
☐ **Row 44**	Ch 1, turn; hdc2tog, hdc in each st across	**(21 hdc)**
☐ **Row 45**	Ch 1, turn; hdc in each st across to last 2 sts, hdc2tog	**(20 hdc)**
☐ **Row 46**	Ch 1, turn; hdc2tog, hdc in each st across	**(19 hdc)**
☐ **Row 47**	Ch 1, turn; hdc in each st across to last 2 sts, hdc2tog	**(18 hdc)**
☐ **Row 48**	Ch 1, turn; hdc2tog, hdc in each st across	**(17 hdc)**
☐ **Row 49**	Ch 1, turn; hdc in each st across to last 2 sts, hdc2tog	**(16 hdc)**
☐ **Row 50**	Ch 1, turn; hdc2tog, hdc in each st across	**(15 hdc)**
☐ **Row 51**	Ch 1, turn; hdc in each st across to last 2 sts, hdc2tog	**(14 hdc)**
☐ **Rows 52 to 56**	Ch 1, turn; hdc in each st across	**(14 hdc)**

A box for each row, 52 to 56: tick them off as you go.

☐ 52 ☐ 53 ☐ 54 ☐ 55 ☐ 56

☐ **End**	The 14 sts left are the shoulder. Fasten off.	

Front, second side of the neck

Yarn A, denim.

☐ **Foundation**	Go back to row 36 of the front, with the same side facing you as for row 37 of the first side. Join yarn A in the next unworked st of row 36. This is the right side as worn. The first st of row 37 goes in the joining st. The neck edge is at the beginning of that row.	
☐ **Row 37**	Ch 1; hdc2tog, hdc in each st across	**(28 hdc)**
☐ **Row 38**	Ch 1, turn; hdc in each st across to last 2 sts, hdc2tog	**(27 hdc)**

For your own crochet, gifts and handmade pieces you sell. Do not resell or share this PDF.

☐ **Row 39**	Ch 1, turn; hdc2tog, hdc in each st across	**(26 hdc)**
☐ **Row 40**	Ch 1, turn; hdc in each st across to last 2 sts, hdc2tog	**(25 hdc)**
☐ **Row 41**	Ch 1, turn; hdc2tog, hdc in each st across	**(24 hdc)**
☐ **Row 42**	Ch 1, turn; hdc in each st across to last 2 sts, hdc2tog	**(23 hdc)**
☐ **Row 43**	Ch 1, turn; hdc2tog, hdc in each st across	**(22 hdc)**
☐ **Row 44**	Ch 1, turn; hdc in each st across to last 2 sts, hdc2tog	**(21 hdc)**
☐ **Row 45**	Ch 1, turn; hdc2tog, hdc in each st across	**(20 hdc)**
☐ **Row 46**	Ch 1, turn; hdc in each st across to last 2 sts, hdc2tog	**(19 hdc)**
☐ **Row 47**	Ch 1, turn; hdc2tog, hdc in each st across	**(18 hdc)**
☐ **Row 48**	Ch 1, turn; hdc in each st across to last 2 sts, hdc2tog	**(17 hdc)**
☐ **Row 49**	Ch 1, turn; hdc2tog, hdc in each st across	**(16 hdc)**
☐ **Row 50**	Ch 1, turn; hdc in each st across to last 2 sts, hdc2tog	**(15 hdc)**
☐ **Row 51**	Ch 1, turn; hdc2tog, hdc in each st across	**(14 hdc)**
☐ **Rows 52 to 56**	Ch 1, turn; hdc in each st across	**(14 hdc)**

A box for each row, 52 to 56: tick them off as you go.

52 53 54 55 56

☐ **End**	The 14 sts left are the shoulder. Fasten off.	

Cuff rib: make 2

Yarn B, ivory.

☐ **Foundation**	With yarn B, ch 7.	
☐ **Row 1 (RS)**	Sc in 2nd ch from hook and in each ch across	**(6 sc)**
☐ **Rows 2 to 26**	Ch 1, turn; sc in back loop only of each st across	**(6 sc)**

A box for each row, 2 to 26: tick them off as you go.

2 3 4 5 6 7 8 9 10 11 12 13 14 15 16 17 18 19 20 21 22 23 24 25 26

☐ **End**	Fasten off.	

Sleeve: make 2

Yarn A, denim.

☐ **Foundation**	Hold a cuff rib with one long edge at the top. Join yarn A at the right-hand end of that edge.	
☐ **Row 1 (RS)**	Ch 1, sc in the end of each rib row across	**(26 sc)**
☐ **Row 2**	Ch 1, turn; hdc in each st across	**(26 hdc)**
☐ **Row 3**	Ch 1, turn; 2 hdc in first st, hdc in each st across to last st, 2 hdc in last st	**(28 hdc)**

For your own crochet, gifts and handmade pieces you sell. Do not resell or share this PDF.

☐ **Rows 4 to 5**	Ch 1, turn; hdc in each st across	**(28 hdc)**

A box for each row, 4 to 5: tick them off as you go.

4 5

☐ **Row 6**	Ch 1, turn; 2 hdc in first st, hdc in each st across to last st, 2 hdc in last st	**(30 hdc)**
☐ **Row 7**	Ch 1, turn; hdc in each st across	**(30 hdc)**
☐ **Row 8**	Ch 1, turn; hdc in each st across	**(30 hdc)**
☐ **Row 9**	Ch 1, turn; 2 hdc in first st, hdc in each st across to last st, 2 hdc in last st	**(32 hdc)**
☐ **Row 10**	Ch 1, turn; hdc in each st across	**(32 hdc)**
☐ **Row 11**	Ch 1, turn; hdc in each st across	**(32 hdc)**
☐ **Row 12**	Ch 1, turn; 2 hdc in first st, hdc in each st across to last st, 2 hdc in last st	**(34 hdc)**
☐ **Row 13**	Ch 1, turn; hdc in each st across	**(34 hdc)**
☐ **Row 14**	Ch 1, turn; hdc in each st across	**(34 hdc)**
☐ **Row 15**	Ch 1, turn; 2 hdc in first st, hdc in each st across to last st, 2 hdc in last st	**(36 hdc)**
☐ **Row 16**	Ch 1, turn; hdc in each st across	**(36 hdc)**
☐ **Row 17**	Ch 1, turn; hdc in each st across	**(36 hdc)**
☐ **Row 18**	Ch 1, turn; 2 hdc in first st, hdc in each st across to last st, 2 hdc in last st	**(38 hdc)**
☐ **Row 19**	Ch 1, turn; hdc in each st across	**(38 hdc)**
☐ **Row 20**	Ch 1, turn; hdc in each st across	**(38 hdc)**
☐ **Row 21**	Ch 1, turn; 2 hdc in first st, hdc in each st across to last st, 2 hdc in last st	**(40 hdc)**
☐ **Row 22**	Ch 1, turn; hdc in each st across	**(40 hdc)**
☐ **Row 23**	Ch 1, turn; hdc in each st across	**(40 hdc)**
☐ **Row 24**	Ch 1, turn; 2 hdc in first st, hdc in each st across to last st, 2 hdc in last st	**(42 hdc)**
☐ **Row 25**	Ch 1, turn; hdc in each st across	**(42 hdc)**
☐ **Row 26**	Ch 1, turn; hdc in each st across	**(42 hdc)**
☐ **Row 27**	Ch 1, turn; 2 hdc in first st, hdc in each st across to last st, 2 hdc in last st	**(44 hdc)**
☐ **Row 28**	Ch 1, turn; hdc in each st across	**(44 hdc)**
☐ **Row 29**	Ch 1, turn; hdc in each st across	**(44 hdc)**
☐ **Row 30**	Ch 1, turn; 2 hdc in first st, hdc in each st across to last st, 2 hdc in last st	**(46 hdc)**
☐ **Row 31**	Ch 1, turn; hdc in each st across	**(46 hdc)**
☐ **Row 32**	Ch 1, turn; hdc in each st across	**(46 hdc)**
☐ **Row 33**	Ch 1, turn; 2 hdc in first st, hdc in each st across to last st, 2 hdc in last st	**(48 hdc)**
☐ **Row 34**	Ch 1, turn; hdc in each st across	**(48 hdc)**
☐ **Row 35**	Ch 1, turn; hdc in each st across	**(48 hdc)**

For your own crochet, gifts and handmade pieces you sell. Do not resell or share this PDF.

☐ **Row 36**	Ch 1, turn; 2 hdc in first st, hdc in each st across to last st, 2 hdc in last st	**(50 hdc)**
☐ **Row 37**	Ch 1, turn; hdc in each st across	**(50 hdc)**
☐ **Row 38**	Ch 1, turn; hdc in each st across	**(50 hdc)**
☐ **Row 39**	Ch 1, turn; 2 hdc in first st, hdc in each st across to last st, 2 hdc in last st	**(52 hdc)**
☐ **Row 40**	Ch 1, turn; hdc in each st across	**(52 hdc)**
☐ **Row 41**	Ch 1, turn; hdc in each st across	**(52 hdc)**
☐ **Row 42**	Ch 1, turn; hdc in each st across	**(52 hdc)**
☐ **End**	The sleeve measures about 16 in (40.5 cm) across the top and 17 in (43 cm) long. Fasten off.	

Neckband

Yarn B, ivory.

Work this at step 2 under Assembly.

The two decreases of each rnd meet at the point of the V, so that the band lies flat.

☐ **Foundation**	With the right side facing, join yarn B at the right shoulder seam (as worn).	
☐ **Rnd 1**	Ch 1, sc in each of the 30 open sts of the back neck, 24 sc evenly along the 20 row ends down the left side of the neck, 24 sc evenly along the 20 row ends up the right side; join with sl st in first sc	**(78 sc)**
☐ **Rnd 2**	Ch 1; sc in next 52 sts, sc2tog twice, sc in each st around; join with sl st in first sc	**(76 sc)**
☐ **Rnd 3**	Ch 1; sc in next 51 sts, sc2tog twice, sc in each st around; join with sl st in first sc	**(74 sc)**
☐ **Rnd 4**	Ch 1; sc in next 50 sts, sc2tog twice, sc in each st around; join with sl st in first sc	**(72 sc)**
☐ **End**	Fasten off.	

Assembly

1. Shoulders: lay the front on the back with right sides together. Sew the 14 sts at each end of the top edge together, and leave the middle 30 sts of the back open for the neck.

2. Neckband: work it now, as written above.

3. Sleeves: with right sides together, put the middle of the top edge of a sleeve at each shoulder seam. Sew the top edge to the straight edges of the armhole, front and back, and sew the top 1½ in (4 cm) of each side edge of the sleeve to the 5 sts left at the underarm.

4. Sides and sleeves: sew each side seam from the underarm down to the hem, and each sleeve seam from the underarm to the cuff edge.

Finishing

- Weave in all the ends. Wash as the yarn label says and lay flat to the measurements to dry.

In all: 11 pieces; 11,542 stitches (408 in each hem rib, 3,588 in the back, 2,428 in the front, 385 in the front, first side of the neck, 385 in the front, second side of the neck, 156 in each cuff rib, 1,664 in each sleeve, 300 in the neckband); 20 ends to weave in.

Found a mistake in this pattern? Tell us at flossfield.com, under Make a request.

For your own crochet, gifts and handmade pieces you sell. Do not resell or share this PDF.