Sweater vest and skirt set

M, to fit bust 37 in (94 cm) · US terms



Finished size

About 39½ in (100.5 cm) at the vest, around the bust and about 23 in (58.5 cm) at the vest, length from the shoulder

To fit bust 37 in (94 cm), waist 29 in (73.5 cm), hip 39 in (99 cm)

Skill

Intermediate

Single crochet with two colors carried in every row, shaping, seams

Yarn

Medium (4), 2 colors

Hook

5.5 mm (US I-9)

Gauge

13 stitches and 15 rows to 4 in (10 cm)

In single crochet (UK double crochet).

What you need

Yarn A: oat cream, color 1 **about 600 yd (549 m), an estimate**

Yarn B: black brown, color 2 **about 925 yd (846 m), an estimate**

By weight: about 760 g in all, an estimate, where 100 g is 200 yd (183 m).

Hook: 5.5 mm (US I-9), or the size that gives you the gauge. Also: yarn needle, scissors and tape measure.

To find how many balls: divide by the length on your yarn's label and round up. Buy them from one dye lot. The estimate is from the stitches of this size at this gauge.

Sizes

Size	Bust	Yarn, an estimate	Vest, around the bust	Vest, length from the shoulder	Vest, armhole depth, before the band	Vest, across above the armholes, before	Skirt, waistband around, not stretched	Skirt, around the hip	Skirt, length	Skirt, around the hem
XS	29 in (73.5 cm)	about 1,250 yd (1,143 m)	32 in (81.5 cm)	20¾ in (52.5 cm)	7½ in (19 cm)	13 in (33 cm)	28½ in (72.5 cm)	35¾ in (91 cm)	17 in (43 cm)	39½ in (100.5 cm)
S	33 in (84 cm)	about 1,375 yd (1,257 m)	35¾ in (91 cm)	22½ in (57 cm)	8 in (20.5 cm)	13½ in (34.5 cm)	29¾ in (75.5 cm)	38¼ in (97 cm)	17 in (43 cm)	41¾ in (106 cm)
M (this file)	**37 in (94 cm)**	**about 1,525 yd (1,394 m)**	**39½ in (100.5 cm)**	**23 in (58.5 cm)**	**8½ in (21.5 cm)**	**14¾ in (37.5 cm)**	**33¼ in (84.5 cm)**	**40½ in (103 cm)**	**17 in (43 cm)**	**46¾ in (118.5 cm)**
L	41 in (104 cm)	about 1,675 yd (1,532 m)	43 in (109 cm)	23½ in (59.5 cm)	9 in (23 cm)	15½ in (39.5 cm)	35½ in (90 cm)	45½ in (115.5 cm)	17 in (43 cm)	51¾ in (131.5 cm)

For your own crochet, gifts and handmade pieces you sell. Do not resell or share this PDF or copies of it.

1X	45 in (114.5 cm)	about 1,825 yd (1,669 m)	48 in (122 cm)	24 in (61 cm)	9½ in (24 cm)	16 in (40.5 cm)	38¾ in (98.5 cm)	49¼ in (125 cm)	17 in (43 cm)	55½ in (141 cm)
2X	49 in (124.5 cm)	about 2,050 yd (1,875 m)	51¾ in (131.5 cm)	24½ in (62 cm)	10¼ in (26 cm)	16½ in (42 cm)	43½ in (110.5 cm)	54¼ in (138 cm)	18 in (45.5 cm)	60¼ in (153 cm)
3X	53 in (134.5 cm)	about 2,175 yd (1,989 m)	55½ in (141 cm)	25¼ in (64 cm)	10¾ in (27.5 cm)	16½ in (42 cm)	45¾ in (116 cm)	56½ in (143.5 cm)	18 in (45.5 cm)	62¾ in (159.5 cm)
4X	57 in (145 cm)	about 2,300 yd (2,103 m)	59 in (150 cm)	25¾ in (65.5 cm)	11¼ in (28.5 cm)	17¼ in (44 cm)	48 in (122 cm)	59 in (150 cm)	18 in (45.5 cm)	65¼ in (165.5 cm)
5X	61 in (155 cm)	about 2,475 yd (2,263 m)	64 in (162.5 cm)	25¾ in (65.5 cm)	11¼ in (28.5 cm)	17¼ in (44 cm)	51½ in (131 cm)	64 in (162.5 cm)	18 in (45.5 cm)	70¼ in (178.5 cm)

Schematic

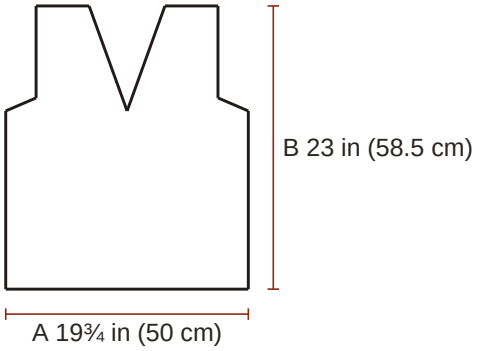

Vest, front
A half the vest, the bust
B the vest, length from the shoulder

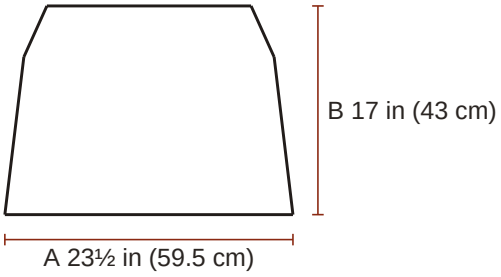

Skirt, laid flat
A the whole width
B from top to bottom

Gauge

13 stitches and 15 rows to 4 in (10 cm) in single crochet.

> **The swatch.** A test piece to measure and pull out. It is not the start of the pattern. Ch 21; begin in the 2nd ch from the hook and work 22 rows of single crochet on 20 sts, about 6¼ in (16 cm) wide and 5¾ in (14.5 cm) high, and measure 4 in (10 cm) in the middle. Use a larger hook if your swatch is small, a smaller one if it is large. The check has the same gauge: work a second swatch of 24 sts with two colors, changing every 2 sts and carrying the yarn, and take a larger hook for the check if it comes out narrower. Ribs: worked sideways, 14 rows and 13 sts to 4 in (10 cm). Bands: 13 sts and 15 rounds to 4 in (10 cm) in single crochet. The round of eyelets: about 5/8 in (1.6 cm) high.

Notes

- Women's sizes, by bust, waist and hip; both pieces are in one table. If your top and bottom sizes differ, take each piece from the sheet of its own size.
- The vest is 2 in (5 cm) to 3 in (7.5 cm) wider than the bust, by the size. The skirt is 1½ in (4 cm) to 2¾ in (7 cm) wider than the hip; its waistband must stretch to go over the hip, and the cord then draws it in. No fit is promised beyond the measurements given.

For your own crochet, gifts and handmade pieces you sell. Do not resell or share this PDF or copies of it.

- The vest is worked in rows that are turned; odd-numbered rows are right side rows. The skirt and the bands are worked in rounds that are not turned; the right side always faces you.
- The turning chain (ch 1 for single crochet, ch 2 for double crochet) never counts as a stitch. Work the first stitch of every row into the first stitch, at the base of the turning chain.
- The chain at the start of a round (ch 1 for single crochet, ch 2 for double crochet) never counts as a stitch. Work the first stitch of the round into the stitch at its base, where the round was joined.
- Left and right are those of the person who wears the vest.
- The ribs are worked sideways in back-loop single crochet: row 1 is plain, and every row after it is worked in back loops only. The vest is worked up from a long edge of a hem rib, one stitch in the end of each rib row.
- The check: every row or round of the check names its colors as they come. Both yarns go along every row: lay the yarn that is not in use along the top of the row below and work the stitches over it, so that it is covered. To change color, work the last yarn over of the last stitch in the old color with the new yarn. Pull the carried yarn snug, but do not let it draw the row in.
- Where the next row of the vest begins with another color, work the last yarn over of the last stitch before the turn with it, so that the turning chain is in it too. An sc2tog is always worked with yarn B. Where the words join yarn B for the check, yarn A is laid in with it and worked over until it is named; where such a row begins with a stitch in yarn A, make its ch 1 with yarn A.
- The check repeats over 4 stitches and 4 rows. It is counted from the middle of each piece, so it goes on over the shapings: work the colors of each row just as they are written.
- The skirt: the rounds that name no color are worked with yarn B alone. Two stitches at each side are always yarn B and make a dark line there; the skirt grows at these lines. Work the sl st that joins a round with the color that the next round begins with, and carry yarn A up at the join between two rounds of the check.
- To work into the end of a row, insert the hook under two threads at the side of its edge stitch.
- A decrease counts as one stitch.
- Sew every seam with the yarn needle and yarn B.
- In back loop only: insert the hook under the loop of the stitch that is farther from you, and leave the nearer loop free.

Instructions

M, to fit bust 37 in (94 cm). US terms.

ch chain, **sl st** slip stitch, **sc** single crochet (UK double crochet), **dc** double crochet (UK treble), **Rnd** round, **st** stitch, **sp** space.

RS right side, the one that shows.

2 sc in next st: both in one stitch. **sc in next 3 sts**: one in each. **ch-1 sp**: the gap under the one chain; the hook goes in the gap.

[ ] 16 times: work what is inside 16 times in all.

(8 sc): the stitches you have when the row is done. **How to read a pattern**.

Special stitches

sc2tog (single crochet 2 stitches together (UK double crochet 2 together)): Insert the hook in the next stitch and pull up a loop, insert the hook in the following stitch and pull up a loop (3 loops on the hook); yarn over and pull through all 3 loops.

For your own crochet, gifts and handmade pieces you sell. Do not resell or share this PDF or copies of it.

Hem rib: make 2, one for the back and one for the front

Yarn B, black brown.

☐ **Foundation**	With yarn B, ch 9.	
☐ **Row 1 (RS)**	Sc in 2nd ch from hook and in each ch across	(8 sc)
☐ **Rows 2 to 64**	Ch 1, turn; sc in back loop only of each st across	(8 sc)

2 3 4 5 6 7 8 9 10 11 12 13 14 15 16 17 18 19 20 21 22 23 24 25 26 27 28 29
30 31 32 33 34 35 36 37 38 39 40 41 42 43 44 45 46 47 48 49 50 51 52 53 54 55 56 57
58 59 60 61 62 63 64

☐ **End**	Fasten off.	

Back

Yarns in order of use: B, black brown; A, oat cream.

☐ **Foundation**	Hold a hem rib with one long edge at the top. Join yarn B at the right-hand end of that edge; ch 1, sc in the end of each rib row across (64 sc). This is row 1, and a right side row.	
☐ **Row 2**	Ch 1, turn; **[**with A sc in next st, with B sc in next 3 sts**] 16 times**	(64 sc)
☐ **Rows 3 to 4**	Ch 1, turn; with A sc in next st, **[**with B sc in next st, with A sc in next 3 sts**] 15 times**, with B sc in next st, with A sc in next 2 sts	(64 sc)

3 4

☐ **Rows 5 to 6**	Ch 1, turn; **[**with A sc in next st, with B sc in next 3 sts**] 16 times**	(64 sc)

5 6

☐ **Rows 7 to 42**	Repeat Rows 3 to 6, 9 more times	(64 sc)

7 8 9 10 11 12 13 14 15 16 17 18 19 20 21 22 23 24 25 26 27 28 29 30 31 32 33 34
35 36 37 38 39 40 41 42

☐ **Rows 43 to 44**	Ch 1, turn; with A sc in next st, **[**with B sc in next st, with A sc in next 3 sts**] 15 times**, with B sc in next st, with A sc in next 2 sts	(64 sc)

43 44

☐ **Row 45**	Ch 1, turn; **[**with A sc in next st, with B sc in next 3 sts**] 16 times**	(64 sc)
☐ **Row 46**	Fasten off and turn. Skip the first 4 sts and join yarn B in the next st; ch 1, and beginning in that st, **[**with A sc in next st, with B sc in next 3 sts**] 14 times**, leave the last 4 sts unworked	(56 sc)
☐ **Row 47**	Ch 1, turn; sc2tog, **[**with A sc in next 3 sts, with B sc in next st**] 13 times**, sc2tog	(54 sc)
☐ **Row 48**	Ch 1, turn; sc2tog, with A sc in next 2 sts, **[**with B sc in next st, with A sc in next 3 sts**] 12 times**, sc2tog	(52 sc)
☐ **Row 49**	Ch 1, turn; sc2tog, **[**with A sc in next st, with B sc in next 3 sts**] 12 times**, sc2tog	(50 sc)
☐ **Row 50**	Ch 1, turn; sc2tog, **[**with B sc in next 3 sts, with A sc in next st**] 11 times**, with B sc in next 2 sts, sc2tog	(48 sc)

For your own crochet, gifts and handmade pieces you sell. Do not resell or share this PDF or copies of it.

☐ **Rows 51 to 52** — Ch 1, turn; with A sc in next st, **[**with B sc in next st, with A sc in next 3 sts**] 11 times**, with B sc in next st, with A sc in next 2 sts (48 sc)

51 52

☐ **Rows 53 to 54** — Ch 1, turn; **[**with A sc in next st, with B sc in next 3 sts**] 12 times** (48 sc)

53 54

☐ **Rows 55 to 74** — Repeat Rows 51 to 54, 5 more times (48 sc)

55 56 57 58 59 60 61 62 63 64 65 66 67 68 69 70 71 72 73 74

☐ **Rows 75 to 76** — Ch 1, turn; with A sc in next st, **[**with B sc in next st, with A sc in next 3 sts**] 11 times**, with B sc in next st, with A sc in next 2 sts (48 sc)

75 76

☐ **Row 77** — Ch 1, turn; **[**with A sc in next st, with B sc in next 3 sts**] 12 times** (48 sc)

☐ **End** — The back measures about 19¾ in (50 cm) wide above the rib, 14¾ in (37.5 cm) across above the armholes and 23 in (58.5 cm) long with the rib. Fasten off.

Front

Yarns in order of use: B, black brown; A, oat cream.

☐ **Foundation** — Hold a hem rib with one long edge at the top. Join yarn B at the right-hand end of that edge; ch 1, sc in the end of each rib row across (64 sc). This is row 1, and a right side row.

☐ **Row 2** — Ch 1, turn; **[**with A sc in next st, with B sc in next 3 sts**] 16 times** (64 sc)

☐ **Rows 3 to 4** — Ch 1, turn; with A sc in next st, **[**with B sc in next st, with A sc in next 3 sts**] 15 times**, with B sc in next st, with A sc in next 2 sts (64 sc)

3 4

☐ **Rows 5 to 6** — Ch 1, turn; **[**with A sc in next st, with B sc in next 3 sts**] 16 times** (64 sc)

5 6

☐ **Rows 7 to 42** — Repeat Rows 3 to 6, 9 more times (64 sc)

7 8 9 10 11 12 13 14 15 16 17 18 19 20 21 22 23 24 25 26 27 28 29 30 31 32 33 34 35 36 37 38 39 40 41 42

☐ **Rows 43 to 44** — Ch 1, turn; with A sc in next st, **[**with B sc in next st, with A sc in next 3 sts**] 15 times**, with B sc in next st, with A sc in next 2 sts (64 sc)

43 44

☐ **Row 45** — Ch 1, turn; **[**with A sc in next st, with B sc in next 3 sts**] 16 times** (64 sc)

☐ **End** — From here on the two sides of the front are worked one after the other, each on its own half of row 45; row 46 joins the yarns anew.

For your own crochet, gifts and handmade pieces you sell. Do not resell or share this PDF or copies of it.

Front, right side

Yarns in order of use: A, oat cream; B, black brown.

☐ **Foundation**	Go on from row 45 of the front. Row 46 is a wrong side row: cut the yarns and join them again as that row says. The armhole edge is at the beginning of that row and the neck edge at its end.	
☐ **Row 46**	Fasten off and turn. Skip the first 4 sts and join yarn B in the next st; ch 1, and beginning in that st, **[**with A sc in next st, with B sc in next 3 sts**] 6 times**, with A sc in next st, with B sc in next st, sc2tog, leave the last 32 sts unworked	(27 sc)
☐ **Row 47**	Ch 1, turn; **[**with B sc in next st, with A sc in next 3 sts**] 6 times**, with B sc in next st, sc2tog	(26 sc)
☐ **Row 48**	Ch 1, turn; sc2tog, with A sc in next 2 sts, **[**with B sc in next st, with A sc in next 3 sts**] 5 times**, sc2tog	(24 sc)
☐ **Row 49**	Ch 1, turn; with B sc in next 2 sts, **[**with A sc in next st, with B sc in next 3 sts**] 5 times**, sc2tog	(23 sc)
☐ **Row 50**	Ch 1, turn; sc2tog, **[**with B sc in next 3 sts, with A sc in next st**] 4 times**, with B sc in next 3 sts, sc2tog	(21 sc)
☐ **Row 51**	Ch 1, turn; with A sc in next 2 sts, **[**with B sc in next st, with A sc in next 3 sts**] 4 times**, with B sc in next st, with A sc in next 2 sts	(21 sc)
☐ **Row 52**	Ch 1, turn; with A sc in next st, **[**with B sc in next st, with A sc in next 3 sts**] 4 times**, with B sc in next st, with A sc in next st, sc2tog	(20 sc)
☐ **Row 53**	Ch 1, turn; **[**with A sc in next st, with B sc in next 3 sts**] 5 times**	(20 sc)
☐ **Row 54**	Ch 1, turn; **[**with A sc in next st, with B sc in next 3 sts**] 4 times**, with A sc in next st, with B sc in next st, sc2tog	(19 sc)
☐ **Row 55**	Ch 1, turn; **[**with B sc in next st, with A sc in next 3 sts**] 4 times**, with B sc in next st, with A sc in next 2 sts	(19 sc)
☐ **Row 56**	Ch 1, turn; with A sc in next st, **[**with B sc in next st, with A sc in next 3 sts**] 4 times**, sc2tog	(18 sc)
☐ **Row 57**	Ch 1, turn; with B sc in next 2 sts, **[**with A sc in next st, with B sc in next 3 sts**] 4 times**	(18 sc)
☐ **Row 58**	Ch 1, turn; **[**with A sc in next st, with B sc in next 3 sts**] 4 times**, sc2tog	(17 sc)
☐ **Row 59**	Ch 1, turn; with A sc in next 2 sts, **[**with B sc in next st, with A sc in next 3 sts**] 3 times**, with B sc in next st, with A sc in next 2 sts	(17 sc)
☐ **Row 60**	Ch 1, turn; with A sc in next st, **[**with B sc in next st, with A sc in next 3 sts**] 3 times**, with B sc in next st, with A sc in next st, sc2tog	(16 sc)
☐ **Row 61**	Ch 1, turn; **[**with A sc in next st, with B sc in next 3 sts**] 4 times**	(16 sc)

For your own crochet, gifts and handmade pieces you sell. Do not resell or share this PDF or copies of it.

☐ **Row 62**	Ch 1, turn; **[**with A sc in next st, with B sc in next 3 sts**] 3 times**, with A sc in next st, with B sc in next st, sc2tog	(15 sc)
☐ **Row 63**	Ch 1, turn; **[**with B sc in next st, with A sc in next 3 sts**] 3 times**, with B sc in next st, with A sc in next 2 sts	(15 sc)
☐ **Row 64**	Ch 1, turn; with A sc in next st, **[**with B sc in next st, with A sc in next 3 sts**] 3 times**, sc2tog	(14 sc)
☐ **Row 65**	Ch 1, turn; with B sc in next 2 sts, **[**with A sc in next st, with B sc in next 3 sts**] 3 times**	(14 sc)
☐ **Row 66**	Ch 1, turn; **[**with A sc in next st, with B sc in next 3 sts**] 3 times**, with A sc in next st, with B sc in next st	(14 sc)
☐ **Row 67**	Ch 1, turn; **[**with A sc in next 3 sts, with B sc in next st**] 3 times**, with A sc in next 2 sts	(14 sc)
☐ **Row 68**	Ch 1, turn; with A sc in next st, **[**with B sc in next st, with A sc in next 3 sts**] 3 times**, with B sc in next st	(14 sc)
☐ **Rows 69 to 76**	Repeat Rows 65 to 68, 2 more times 69 70 71 72 73 74 75 76	(14 sc)
☐ **Row 77**	Ch 1, turn; with B sc in next 2 sts, **[**with A sc in next st, with B sc in next 3 sts**] 3 times**	(14 sc)
☐ **End**	The 14 sts left are the shoulder. Fasten off.	

Front, left side

Yarns in order of use: B, black brown; A, oat cream.

☐ **Foundation**	Go back to row 45 of the front, with the wrong side facing you, as for row 46 of the right side. Join yarn B in the next unworked st, the first of the 32 sts left. The first st of row 46 goes in the joining st. The neck edge is at the beginning of that row and the armhole edge at its end.	
☐ **Row 46**	Ch 1; sc2tog, with B sc in next 2 sts, **[**with A sc in next st, with B sc in next 3 sts**] 6 times**, leave the last 4 sts unworked	(27 sc)
☐ **Row 47**	Ch 1, turn; sc2tog, **[**with A sc in next 3 sts, with B sc in next st**] 6 times**, with A sc in next st	(26 sc)
☐ **Row 48**	Ch 1, turn; sc2tog, with A sc in next 2 sts, **[**with B sc in next st, with A sc in next 3 sts**] 5 times**, sc2tog	(24 sc)
☐ **Row 49**	Ch 1, turn; sc2tog, **[**with A sc in next st, with B sc in next 3 sts**] 5 times**, with A sc in next st, with B sc in next st	(23 sc)
☐ **Row 50**	Ch 1, turn; sc2tog, **[**with A sc in next st, with B sc in next 3 sts**] 4 times**, with A sc in next st, with B sc in next 2 sts, sc2tog	(21 sc)
☐ **Row 51**	Ch 1, turn; with A sc in next st, **[**with B sc in next st, with A sc in next 3 sts**] 5 times**	(21 sc)
☐ **Row 52**	Ch 1, turn; sc2tog, **[**with B sc in next st, with A sc in next 3 sts**] 4 times**, with B sc in next st, with A sc in next 2 sts	(20 sc)

For your own crochet, gifts and handmade pieces you sell. Do not resell or share this PDF or copies of it.

☐ **Row 53**	Ch 1, turn; **[**with A sc in next st, with B sc in next 3 sts**] 5 times**	(20 sc)
☐ **Row 54**	Ch 1, turn; sc2tog, with B sc in next 2 sts, **[**with A sc in next st, with B sc in next 3 sts**] 4 times**	(19 sc)
☐ **Row 55**	Ch 1, turn; with A sc in next st, **[**with B sc in next st, with A sc in next 3 sts**] 4 times**, with B sc in next st, with A sc in next st	(19 sc)
☐ **Row 56**	Ch 1, turn; sc2tog, with A sc in next 2 sts, **[**with B sc in next st, with A sc in next 3 sts**] 3 times**, with B sc in next st, with A sc in next 2 sts	(18 sc)
☐ **Row 57**	Ch 1, turn; **[**with A sc in next st, with B sc in next 3 sts**] 4 times**, with A sc in next st, with B sc in next st	(18 sc)
☐ **Row 58**	Ch 1, turn; sc2tog, **[**with A sc in next st, with B sc in next 3 sts**] 4 times**	(17 sc)
☐ **Row 59**	Ch 1, turn; with A sc in next st, **[**with B sc in next st, with A sc in next 3 sts**] 4 times**	(17 sc)
☐ **Row 60**	Ch 1, turn; sc2tog, **[**with B sc in next st, with A sc in next 3 sts**] 3 times**, with B sc in next st, with A sc in next 2 sts	(16 sc)
☐ **Row 61**	Ch 1, turn; **[**with A sc in next st, with B sc in next 3 sts**] 4 times**	(16 sc)
☐ **Row 62**	Ch 1, turn; sc2tog, with B sc in next 2 sts, **[**with A sc in next st, with B sc in next 3 sts**] 3 times**	(15 sc)
☐ **Row 63**	Ch 1, turn; with A sc in next st, **[**with B sc in next st, with A sc in next 3 sts**] 3 times**, with B sc in next st, with A sc in next st	(15 sc)
☐ **Row 64**	Ch 1, turn; sc2tog, with A sc in next 2 sts, [with B sc in next st, with A sc in next 3 sts] twice, with B sc in next st, with A sc in next 2 sts	(14 sc)
☐ **Row 65**	Ch 1, turn; **[**with A sc in next st, with B sc in next 3 sts**] 3 times**, with A sc in next st, with B sc in next st	(14 sc)
☐ **Row 66**	Ch 1, turn; with B sc in next 2 sts, **[**with A sc in next st, with B sc in next 3 sts**] 3 times**	(14 sc)
☐ **Row 67**	Ch 1, turn; with A sc in next st, **[**with B sc in next st, with A sc in next 3 sts**] 3 times**, with B sc in next st	(14 sc)
☐ **Row 68**	Ch 1, turn; **[**with A sc in next 3 sts, with B sc in next st**] 3 times**, with A sc in next 2 sts	(14 sc)
☐ **Rows 69 to 76** 69 70 71 72 73 74 75 76	Repeat Rows 65 to 68, 2 more times	(14 sc)
☐ **Row 77**	Ch 1, turn; **[**with A sc in next st, with B sc in next 3 sts**] 3 times**, with A sc in next st, with B sc in next st	(14 sc)
☐ **End**	The 14 sts left are the shoulder. Fasten off.	

For your own crochet, gifts and handmade pieces you sell. Do not resell or share this PDF or copies of it.

Neckband

Yarn B, black brown.

☐ **Foundation**	Work this at step 3 of Assembly. With the right side facing, join yarn B in the first of the 20 free sts of the back neck, beside the right shoulder seam. Rnd 1 goes along the back neck, down the 32 rows of the left side of the neck and up the 32 rows of the right side.	
☐ **Rnd 1**	Ch 1; sc in each of next 20 free sts, now down the left side, **[**sc in the end of each of next 6 rows, skip the end of next row**] 4 times**, sc in the end of each of next 4 rows, now up the right side, **[**sc in the end of each of next 6 rows, skip the end of next row**] 4 times**, sc in the end of each of next 4 rows; join with sl st in first sc	(76 sc)
☐ **Rnd 2**	Ch 1; sc in next 46 sts, sc2tog twice, sc in each st around; join with sl st in first sc	(74 sc)
☐ **Rnd 3**	Ch 1; sc in next 45 sts, sc2tog twice, sc in each st around; join with sl st in first sc	(72 sc)
☐ **Rnd 4**	Ch 1; sc in next 44 sts, sc2tog twice, sc in each st around; join with sl st in first sc	(70 sc)
☐ **End**	The two decreases of each rnd meet at the point of the V, so that the band lies flat. Fasten off.	

Armhole band: make 2

Yarn B, black brown.

☐ **Foundation**	Work this at step 4 of Assembly. With the right side facing, join yarn B in the first of the 4 free sts to the left of a side seam. Rnd 1 goes along these sts, up the 32 rows to the shoulder seam, down the 32 rows on the other side of it and along the last 4 free sts, back to the side seam.	
☐ **Rnd 1**	Ch 1; sc in each of next 4 free sts, now up to the shoulder, **[**sc in the end of each of next 6 rows, skip the end of next row**] 4 times**, sc in the end of each of next 4 rows, now down from the shoulder, **[**sc in the end of each of next 6 rows, skip the end of next row**] 4 times**, sc in the end of each of next 4 rows, now along the underarm, sc in each of next 4 free sts; join with sl st in first sc	(64 sc)
☐ **Rnds 2 to 3** 2 3	Ch 1; sc in each st around; join with sl st in first sc	(64 sc)
☐ **End**	Fasten off.	

Waistband

Yarn B, black brown.

☐ **Foundation**	With yarn B, ch 10.	
☐ **Row 1 (RS)**	Sc in 2nd ch from hook and in each ch across	(9 sc)
☐ **Rows 2 to 116**	Ch 1, turn; sc in back loop only of each st across	(9 sc)

2 3 4 5 6 7 8 9 10 11 12 13 14 15 16 17 18 19 20 21 22 23 24 25 26 27 28 29
30 31 32 33 34 35 36 37 38 39 40 41 42 43 44 45 46 47 48 49 50 51 52 53 54 55 56 57
58 59 60 61 62 63 64 65 66 67 68 69 70 71 72 73 74 75 76 77 78 79 80 81 82 83 84 85
86 87 88 89 90 91 92 93 94 95 96 97 98 99 100 101 102 103 104 105 106 107 108 109 110 111 112 113

For your own crochet, gifts and handmade pieces you sell. Do not resell or share this PDF or copies of it.

114 115 116

☐ **End**	Do not fasten off. Close the waistband into a ring: ch 1, turn, bring the foundation chain up behind row 116, and work 9 sl sts, each through the back loop of the next st of row 116 and the free loop of the ch behind it together. Fasten off. Turn the ring so that the ridge of slip stitches is inside: the inside is the wrong side. The waistband is about 2¾ in (7 cm) deep and 33¼ in (84.5 cm) around, not stretched.

Skirt

Yarns in order of use: B, black brown; A, oat cream.

☐ **Foundation**	Hold the waistband with the right side out and either long edge uppermost. With the right side facing, join yarn B in the end of the first row to the left of the seam; ch 1, sc in the end of each of the 116 rows around (116 sc), loosely, so that the edge stretches with the rib; join with sl st in first sc. This is rnd 1. The seam is the middle of the back.	
☐ **Rnd 2**	Ch 2; **[**dc in next st, ch 1, skip next st**] 58 times**; join with sl st in first dc	(58 dc, 58 ch-1 sps)
☐ **Rnd 3**	Ch 1; **[**sc in next st, sc in next ch-1 sp**] 58 times**; join with sl st in first sc	(116 sc)
☐ **Rnd 4**	Ch 1; **[**sc in next 6 sts, 2 sc in next st**] 12 times**, **[**sc in next 7 sts, 2 sc in next st**] 4 times**; join with sl st in first sc	(132 sc)
☐ **Rnd 5**	Ch 1; with A sc in next 2 sts, **[**with B sc in next st, with A sc in next 3 sts**] 7 times**, with B sc in next st, with A sc in next st, with B sc in next 2 sts, with A sc in next 2 sts, **[**with B sc in next st, with A sc in next 3 sts**] 15 times**, with B sc in next st, with A sc in next st, with B sc in next 2 sts, with A sc in next 2 sts, **[**with B sc in next st, with A sc in next 3 sts**] 7 times**, with B sc in next st, with A sc in next st; join with sl st in first sc	(132 sc)
☐ **Rnd 6**	Ch 1; **[**with A sc in next st, with B sc in next 3 sts**] 7 times**, with A sc in next st, with B sc in next 5 sts, **[**with A sc in next st, with B sc in next 3 sts**] 15 times**, with A sc in next st, with B sc in next 5 sts, **[**with A sc in next st, with B sc in next 3 sts**] 8 times**; join with sl st in first sc	(132 sc)
☐ **Rnd 7**	Ch 1; **[**with B sc in next 3 sts, with A sc in next st**] 8 times**, with B sc in next 5 sts, **[**with A sc in next st, with B sc in next 3 sts**] 15 times**, with A sc in next st, with B sc in next 5 sts, **[**with A sc in next st, with B sc in next 3 sts**] 7 times**, with A sc in next st; join with sl st in first sc	(132 sc)
☐ **Rnd 8**	Ch 1; with A sc in next st, **[**with B sc in next st, with A sc in next 3 sts**] 7 times**, with B sc in next st, with A sc in next 2 sts, with B sc in next 2 sts, with A sc in next st, **[**with B sc in next st, with A sc in next 3 sts**] 15 times**, with B sc in next st, with A sc in next 2 sts, with B sc in next 2 sts, with A sc in next st, **[**with B sc in next st, with A sc in next 3 sts**] 7 times**, with B sc in next st, with A sc in next 2 sts; join with sl st in first sc	(132 sc)
☐ **Rnds 9 to 12**	Repeat Rnds 5 to 8, once more	(132 sc)

9 10 11 12

For your own crochet, gifts and handmade pieces you sell. Do not resell or share this PDF or copies of it.

☐ **Rnd 13**	Ch 1; with A sc in next 2 sts, **[**with B sc in next st, with A sc in next 3 sts**] 7 times**, with B sc in next st, with A sc in next st, with B sc in next 2 sts, with A sc in next 2 sts, **[**with B sc in next st, with A sc in next 3 sts**] 15 times**, with B sc in next st, with A sc in next st, with B sc in next 2 sts, with A sc in next 2 sts, **[**with B sc in next st, with A sc in next 3 sts**] 7 times**, with B sc in next st, with A sc in next st; join with sl st in first sc	(132 sc)
☐ **Rnd 14**	Ch 1; **[**with A sc in next st, with B sc in next 3 sts**] 7 times**, with A sc in next st, with B sc in next 5 sts, **[**with A sc in next st, with B sc in next 3 sts**] 15 times**, with A sc in next st, with B sc in next 5 sts, **[**with A sc in next st, with B sc in next 3 sts**] 8 times**; join with sl st in first sc	(132 sc)
☐ **Rnd 15**	Ch 1; **[**with B sc in next 3 sts, with A sc in next st**] 8 times**, with B 2 sc in each of next 2 sts, **[**with B sc in next 3 sts, with A sc in next st**] 16 times**, with B 2 sc in each of next 2 sts, **[**with B sc in next 3 sts, with A sc in next st**] 8 times**; join with sl st in first sc	(136 sc)
☐ **Rnd 16**	Ch 1; with A sc in next st, **[**with B sc in next st, with A sc in next 3 sts**] 8 times**, with B sc in next 2 sts, with A sc in next 2 sts, **[**with B sc in next st, with A sc in next 3 sts**] 16 times**, with B sc in next 2 sts, with A sc in next 2 sts, **[**with B sc in next st, with A sc in next 3 sts**] 7 times**, with B sc in next st, with A sc in next 2 sts; join with sl st in first sc	(136 sc)
☐ **Rnd 17**	Ch 1; with A sc in next 2 sts, **[**with B sc in next st, with A sc in next 3 sts**] 7 times**, with B sc in next st, with A sc in next 2 sts, with B sc in next 2 sts, **[**with A sc in next 3 sts, with B sc in next st**] 16 times**, with A sc in next 2 sts, with B sc in next 2 sts, **[**with A sc in next 3 sts, with B sc in next st**] 8 times**, with A sc in next st; join with sl st in first sc	(136 sc)
☐ **Rnd 18**	Ch 1; **[**with A sc in next st, with B sc in next 3 sts**] 34 times**; join with sl st in first sc	(136 sc)
☐ **Rnd 19**	Ch 1; **[**with B sc in next 3 sts, with A sc in next st**] 34 times**; join with sl st in first sc	(136 sc)
☐ **Rnd 20**	Ch 1; with A sc in next st, **[**with B sc in next st, with A sc in next 3 sts**] 8 times**, with B sc in next 2 sts, with A sc in next 2 sts, **[**with B sc in next st, with A sc in next 3 sts**] 16 times**, with B sc in next 2 sts, with A sc in next 2 sts, **[**with B sc in next st, with A sc in next 3 sts**] 7 times**, with B sc in next st, with A sc in next 2 sts; join with sl st in first sc	(136 sc)
☐ **Rnd 21**	Ch 1; with A sc in next 2 sts, **[**with B sc in next st, with A sc in next 3 sts**] 7 times**, with B sc in next st, with A sc in next 2 sts, with B sc in next 2 sts, **[**with A sc in next 3 sts, with B sc in next st**] 16 times**, with A sc in next 2 sts, with B sc in next 2 sts, **[**with A sc in next 3 sts, with B sc in next st**] 8 times**, with A sc in next st; join with sl st in first sc	(136 sc)
☐ **Rnd 22**	Ch 1; **[**with A sc in next st, with B sc in next 3 sts**] 34 times**; join with sl st in first sc	(136 sc)

For your own crochet, gifts and handmade pieces you sell. Do not resell or share this PDF or copies of it.

☐ **Rnd 23**	Ch 1; **[**with B sc in next 3 sts, with A sc in next st**] 8 times**, with B sc in next st, with B 2 sc in each of next 2 sts, **[**with A sc in next st, with B sc in next 3 sts**] 16 times**, with A sc in next st, with B sc in next st, with B 2 sc in each of next 2 sts, **[**with A sc in next st, with B sc in next 3 sts**] 8 times**, with A sc in next st; join with sl st in first sc	(140 sc)
☐ **Rnd 24**	Ch 1; with A sc in next st, **[**with B sc in next st, with A sc in next 3 sts**] 8 times**, with B sc in next 3 sts, **[**with A sc in next 3 sts, with B sc in next st**] 16 times**, with A sc in next 3 sts, with B sc in next 3 sts, **[**with A sc in next 3 sts, with B sc in next st**] 8 times**, with A sc in next 2 sts; join with sl st in first sc	(140 sc)
☐ **Rnd 25**	Ch 1; with A sc in next 2 sts, **[**with B sc in next st, with A sc in next 3 sts**] 8 times**, with B sc in next 3 sts, **[**with A sc in next 3 sts, with B sc in next st**] 16 times**, with A sc in next 3 sts, with B sc in next 3 sts, **[**with A sc in next 3 sts, with B sc in next st**] 8 times**, with A sc in next st; join with sl st in first sc	(140 sc)
☐ **Rnd 26**	Ch 1; **[**with A sc in next st, with B sc in next 3 sts**] 8 times**, with A sc in next st, with B sc in next 5 sts, **[**with A sc in next st, with B sc in next 3 sts**] 16 times**, with A sc in next st, with B sc in next 5 sts, **[**with A sc in next st, with B sc in next 3 sts**] 8 times**; join with sl st in first sc	(140 sc)
☐ **Rnd 27**	Ch 1; **[**with B sc in next 3 sts, with A sc in next st**] 8 times**, with B sc in next 5 sts, **[**with A sc in next st, with B sc in next 3 sts**] 16 times**, with A sc in next st, with B sc in next 5 sts, **[**with A sc in next st, with B sc in next 3 sts**] 8 times**, with A sc in next st; join with sl st in first sc	(140 sc)
☐ **Rnd 28**	Ch 1; with A sc in next st, **[**with B sc in next st, with A sc in next 3 sts**] 8 times**, with B sc in next 3 sts, **[**with A sc in next 3 sts, with B sc in next st**] 16 times**, with A sc in next 3 sts, with B sc in next 3 sts, **[**with A sc in next 3 sts, with B sc in next st**] 8 times**, with A sc in next 2 sts; join with sl st in first sc	(140 sc)
☐ **Rnd 29**	Ch 1; with A sc in next 2 sts, **[**with B sc in next st, with A sc in next 3 sts**] 8 times**, with B sc in next 3 sts, **[**with A sc in next 3 sts, with B sc in next st**] 16 times**, with A sc in next 3 sts, with B sc in next 3 sts, **[**with A sc in next 3 sts, with B sc in next st**] 8 times**, with A sc in next st; join with sl st in first sc	(140 sc)
☐ **Rnd 30**	Ch 1; **[**with A sc in next st, with B sc in next 3 sts**] 8 times**, with A sc in next st, with B sc in next 5 sts, **[**with A sc in next st, with B sc in next 3 sts**] 16 times**, with A sc in next st, with B sc in next 5 sts, **[**with A sc in next st, with B sc in next 3 sts**] 8 times**; join with sl st in first sc	(140 sc)
☐ **Rnd 31**	Ch 1; **[**with B sc in next 3 sts, with A sc in next st**] 8 times**, with B sc in next 2 sts, with B 2 sc in each of next 2 sts, with B sc in next st, **[**with A sc in next st, with B sc in next 3 sts**] 16 times**, with A sc in next st, with B sc in next 2 sts, with B 2 sc in each of next 2 sts, with B sc in next st, **[**with A sc in next st, with B sc in next 3 sts**] 8 times**, with A sc in next st; join with sl st in first sc	(144 sc)

For your own crochet, gifts and handmade pieces you sell. Do not resell or share this PDF or copies of it.

☐ **Rnd 32**	Ch 1; with A sc in next st, **[**with B sc in next st, with A sc in next 3 sts**] 8 times**, with B sc in next st, with A sc in next st, with B sc in next 3 sts, **[**with A sc in next 3 sts, with B sc in next st**] 17 times**, with A sc in next st, with B sc in next 3 sts, **[**with A sc in next 3 sts, with B sc in next st**] 8 times**, with A sc in next 2 sts; join with sl st in first sc	(144 sc)
☐ **Rnd 33**	Ch 1; with A sc in next 2 sts, **[**with B sc in next st, with A sc in next 3 sts**] 8 times**, with B sc in next 3 sts, with A sc in next st, **[**with B sc in next st, with A sc in next 3 sts**] 17 times**, with B sc in next 3 sts, with A sc in next st, **[**with B sc in next st, with A sc in next 3 sts**] 8 times**, with B sc in next st, with A sc in next st; join with sl st in first sc	(144 sc)
☐ **Rnd 34**	Ch 1; **[**with A sc in next st, with B sc in next 3 sts**] 8 times**, with A sc in next st, with B sc in next 7 sts, **[**with A sc in next st, with B sc in next 3 sts**] 16 times**, with A sc in next st, with B sc in next 7 sts, **[**with A sc in next st, with B sc in next 3 sts**] 8 times**; join with sl st in first sc	(144 sc)
☐ **Rnd 35**	Ch 1; **[**with B sc in next 3 sts, with A sc in next st**] 8 times**, with B sc in next 7 sts, **[**with A sc in next st, with B sc in next 3 sts**] 16 times**, with A sc in next st, with B sc in next 7 sts, **[**with A sc in next st, with B sc in next 3 sts**] 8 times**, with A sc in next st; join with sl st in first sc	(144 sc)
☐ **Rnd 36**	Ch 1; with A sc in next st, **[**with B sc in next st, with A sc in next 3 sts**] 8 times**, with B sc in next st, with A sc in next st, with B sc in next 3 sts, **[**with A sc in next 3 sts, with B sc in next st**] 17 times**, with A sc in next st, with B sc in next 3 sts, **[**with A sc in next 3 sts, with B sc in next st**] 8 times**, with A sc in next 2 sts; join with sl st in first sc	(144 sc)
☐ **Rnd 37**	Ch 1; with A sc in next 2 sts, **[**with B sc in next st, with A sc in next 3 sts**] 8 times**, with B sc in next 3 sts, with A sc in next st, **[**with B sc in next st, with A sc in next 3 sts**] 17 times**, with B sc in next 3 sts, with A sc in next st, **[**with B sc in next st, with A sc in next 3 sts**] 8 times**, with B sc in next st, with A sc in next st; join with sl st in first sc	(144 sc)
☐ **Rnd 38**	Ch 1; **[**with A sc in next st, with B sc in next 3 sts**] 8 times**, with A sc in next st, with B sc in next 7 sts, **[**with A sc in next st, with B sc in next 3 sts**] 16 times**, with A sc in next st, with B sc in next 7 sts, **[**with A sc in next st, with B sc in next 3 sts**] 8 times**; join with sl st in first sc	(144 sc)
☐ **Rnd 39**	Ch 1; **[**with B sc in next 3 sts, with A sc in next st**] 8 times**, with B sc in next 3 sts, with B 2 sc in each of next 2 sts, with B sc in next 2 sts, **[**with A sc in next st, with B sc in next 3 sts**] 17 times**, with B 2 sc in each of next 2 sts, with B sc in next 2 sts, **[**with A sc in next st, with B sc in next 3 sts**] 8 times**, with A sc in next st; join with sl st in first sc	(148 sc)
☐ **Rnd 40**	Ch 1; with A sc in next st, **[**with B sc in next st, with A sc in next 3 sts**] 8 times**, with B sc in next st, with A sc in next 2 sts, with B sc in next 2 sts, with A sc in next st, **[**with B sc in next st, with A sc in next 3 sts**] 17 times**, with B sc in next st, with A sc in next 2 sts, with B sc in next 2 sts, with A sc in next st, **[**with B sc in next st, with A sc in next 3 sts**] 8 times**, with B sc in next st, with A sc in next 2 sts; join with sl st in first sc	(148 sc)

For your own crochet, gifts and handmade pieces you sell. Do not resell or share this PDF or copies of it.

☐ **Rnd 41**	Ch 1; with A sc in next 2 sts, **[**with B sc in next st, with A sc in next 3 sts**] 8 times**, with B sc in next st, with A sc in next st, with B sc in next 2 sts, with A sc in next 2 sts, **[**with B sc in next st, with A sc in next 3 sts**] 17 times**, with B sc in next st, with A sc in next st, with B sc in next 2 sts, with A sc in next 2 sts, **[**with B sc in next st, with A sc in next 3 sts**] 8 times**, with B sc in next st, with A sc in next st; join with sl st in first sc	(148 sc)
☐ **Rnd 42**	Ch 1; **[**with A sc in next st, with B sc in next 3 sts**] 8 times**, with A sc in next st, with B sc in next 5 sts, **[**with A sc in next st, with B sc in next 3 sts**] 17 times**, with A sc in next st, with B sc in next 5 sts, **[**with A sc in next st, with B sc in next 3 sts**] 9 times**; join with sl st in first sc	(148 sc)
☐ **Rnd 43**	Ch 1; **[**with B sc in next 3 sts, with A sc in next st**] 9 times**, with B sc in next 5 sts, **[**with A sc in next st, with B sc in next 3 sts**] 17 times**, with A sc in next st, with B sc in next 5 sts, **[**with A sc in next st, with B sc in next 3 sts**] 8 times**, with A sc in next st; join with sl st in first sc	(148 sc)
☐ **Rnd 44**	Ch 1; with A sc in next st, **[**with B sc in next st, with A sc in next 3 sts**] 8 times**, with B sc in next st, with A sc in next 2 sts, with B sc in next 2 sts, with A sc in next st, **[**with B sc in next st, with A sc in next 3 sts**] 17 times**, with B sc in next st, with A sc in next 2 sts, with B sc in next 2 sts, with A sc in next st, **[**with B sc in next st, with A sc in next 3 sts**] 8 times**, with B sc in next st, with A sc in next 2 sts; join with sl st in first sc	(148 sc)
☐ **Rnd 45**	Ch 1; with A sc in next 2 sts, **[**with B sc in next st, with A sc in next 3 sts**] 8 times**, with B sc in next st, with A sc in next st, with B sc in next 2 sts, with A sc in next 2 sts, **[**with B sc in next st, with A sc in next 3 sts**] 17 times**, with B sc in next st, with A sc in next st, with B sc in next 2 sts, with A sc in next 2 sts, **[**with B sc in next st, with A sc in next 3 sts**] 8 times**, with B sc in next st, with A sc in next st; join with sl st in first sc	(148 sc)
☐ **Rnd 46**	Ch 1; **[**with A sc in next st, with B sc in next 3 sts**] 8 times**, with A sc in next st, with B sc in next 5 sts, **[**with A sc in next st, with B sc in next 3 sts**] 17 times**, with A sc in next st, with B sc in next 5 sts, **[**with A sc in next st, with B sc in next 3 sts**] 9 times**; join with sl st in first sc	(148 sc)
☐ **Rnd 47**	Ch 1; **[**with B sc in next 3 sts, with A sc in next st**] 9 times**, with B 2 sc in each of next 2 sts, **[**with B sc in next 3 sts, with A sc in next st**] 18 times**, with B 2 sc in each of next 2 sts, **[**with B sc in next 3 sts, with A sc in next st**] 9 times**; join with sl st in first sc	(152 sc)
☐ **Rnd 48**	Ch 1; with A sc in next st, **[**with B sc in next st, with A sc in next 3 sts**] 9 times**, with B sc in next 2 sts, with A sc in next 2 sts, **[**with B sc in next st, with A sc in next 3 sts**] 18 times**, with B sc in next 2 sts, with A sc in next 2 sts, **[**with B sc in next st, with A sc in next 3 sts**] 8 times**, with B sc in next st, with A sc in next 2 sts; join with sl st in first sc	(152 sc)
☐ **Rnds 49 to 52** 49 50 51 52	Ch 1; sc in each st around; join with sl st in first sc	(152 sc)
☐ **End**	Fasten off.	

For your own crochet, gifts and handmade pieces you sell. Do not resell or share this PDF or copies of it.

Cord

Yarn A, oat cream.

☐ **Foundation**	With yarn A, ch 207.	
☐ **Row 1**	Sl st in 2nd ch from hook and in each ch across	(206 sl sts)
☐ **End**	The cord is about 55 in (139.5 cm) long (the slip stitches draw the chain in). Fasten off.	

Assembly

1. Vest, shoulders: lay the front on the back with right sides together. Sew the 14 shoulder sts of each side of the front to the 14 sts at that end of the last row of the back, st to st, and leave the middle 20 sts of the back free for the neck.

2. Vest, sides: sew each side seam from the armhole down to the hem, the 45 row ends of the front to the 45 row ends of the back and the two ends of the ribs to each other.

3. Vest, neckband: work it now, as written above.

4. Vest, armhole bands: work the two armhole bands now, as written above.

5. Skirt: thread the cord. Rnd 2 of the skirt has 58 chain spaces. Counted from the join, at the middle of the back, the middle of the front lies between spaces 29 and 30. Take one end of the cord from the outside in through space 30, out through the next space, and so on, in and out, all the way around; it comes out again through space 29. Even out the two ends, make a knot in each, draw the waist in and tie a bow at the front.

Finishing

- Weave in all the ends. Wash as the yarn label says and lay flat to the measurements to dry.

In all: 4 pieces; 18,316 stitches.

Found a mistake in this pattern? Tell us at flossfield.com, under Make a request.

For your own crochet, gifts and handmade pieces you sell. Do not resell or share this PDF or copies of it.