Bullseye target, two arrows and oak leaf

Sized for a 6 inch hoop (15 cm). The stitched design is about 4.2 × 4.5 in (10.7 × 11.4 cm).



Which color goes where.

Stitches

- **Long and short stitch**, 1 to 2 strands
  Stand, straw rim, oak leaf
- **Split stitch**, 1 to 2 strands
  Stand, upper arrow shaft, lower arrow shaft
- **Satin stitch**, 2 strands
  Stand, cream ring, ink ring, blue ring, red ring, gold bullseye, upper arrow feathers, upper arrow shaft, upper arrow cock feather, and 7 more
- **French knot**, 2 strands, two wraps
  Stand, acorn cups
- **Stem stitch**, 1 to 4 strands
  Grass, straw rim, ring lines, rim line, oak leaf edge, leaf veins, sprig
- **Padded satin stitch**, 2 strands
  Gold bullseye
- **Straight stitch**, 2 strands
  Entry marks

In a 6 inch hoop the French knots are drawn smaller than about 2 mm (a little over 1/16 in). Use one strand of floss for them there, or choose a larger hoop.

Floss

- **DMC 898 Very Dark Coffee Brown**
  Stand (dark), rim line, acorn cups and upper arrow shaft (darker) and 2 more parts
- **DMC 433 Medium Brown**
  Stand (middle), acorn cups (lighter), acorns (dark), sprig
- **DMC 435 Very Light Brown**
  Stand (light), straw rim (darkest), acorns (middle)
- **DMC 3363 Medium Pine Green** Grass (middle)
- **DMC 3362 Dark Pine Green** Grass (dark)
- **DMC 3364 Pine Green** Grass (light)
- **DMC 422 Light Hazelnut Brown**
  Straw rim (light), upper arrow shaft and lower arrow shaft (lighter)
- **DMC 3828 Hazelnut Brown** Straw rim (dark)
- **DMC 677 Very Light Old Gold**
  Straw rim (lightest), leaf veins
- **DMC 712 Cream**
  Cream ring, lower arrow cock feather and upper arrow cock feather, ring lines (light)
- **DMC 3799 Very Dark Pewter Gray**
  Ink ring, ring lines (dark)
- **DMC 931 Medium Antique Blue** Blue ring
- **DMC 347 Very Dark Salmon**
  Red ring, arrow bands and nocks (lighter)
- **DMC 783 Medium Topaz**
  Acorns (light), oak leaf (lightest), gold bullseye (darker)
- **DMC 3820 Dark Straw** Gold bullseye (lighter)
- **DMC 782 Dark Topaz** Ring lines (middle)
- **DMC 3328 Dark Salmon** Upper arrow feathers (lighter)
- **DMC 815 Medium Garnet** Upper arrow feathers (darker)
- **DMC 930 Dark Antique Blue**
  Lower arrow feathers, arrow bands and nocks (darker)
- **DMC 932 Light Antique Blue**
  Lower arrow feathers (lighter)
- **DMC 920 Medium Copper** Oak leaf (dark)
- **DMC 918 Dark Red Copper**
  Oak leaf edge, oak leaf (darkest)
- **DMC 921 Copper** Oak leaf (middle)
- **DMC 922 Light Copper** Oak leaf (light)

Three ways to transfer the pattern

1. **Fabric you can see through**
   Tape page 2 to a sunny window or lay it on a light box, tape the fabric over it and trace the lines with a sharp pencil or a water-soluble pen.
2. **Fabric you cannot see through**
   Lay dressmaker's carbon paper colored side down on the fabric with page 2 on top, tape the layers and trace the lines firmly with a ballpoint pen.
3. **Iron-on**
   Go over the lines of page 3, the mirrored page, with an iron-on transfer pen, lay it ink side down on the fabric and press with a dry iron.

Pages 2 and 3 are the pattern at actual size. Print them at 100% with scaling turned off.

For your own stitching, gifts and handmade pieces you sell. Do not resell or share this PDF or copies of it.

Bullseye target, two arrows and oak leaf

6 inch hoop

Print at 100% (actual size). Do not scale or fit to page. Check the square below with a ruler before you trace.

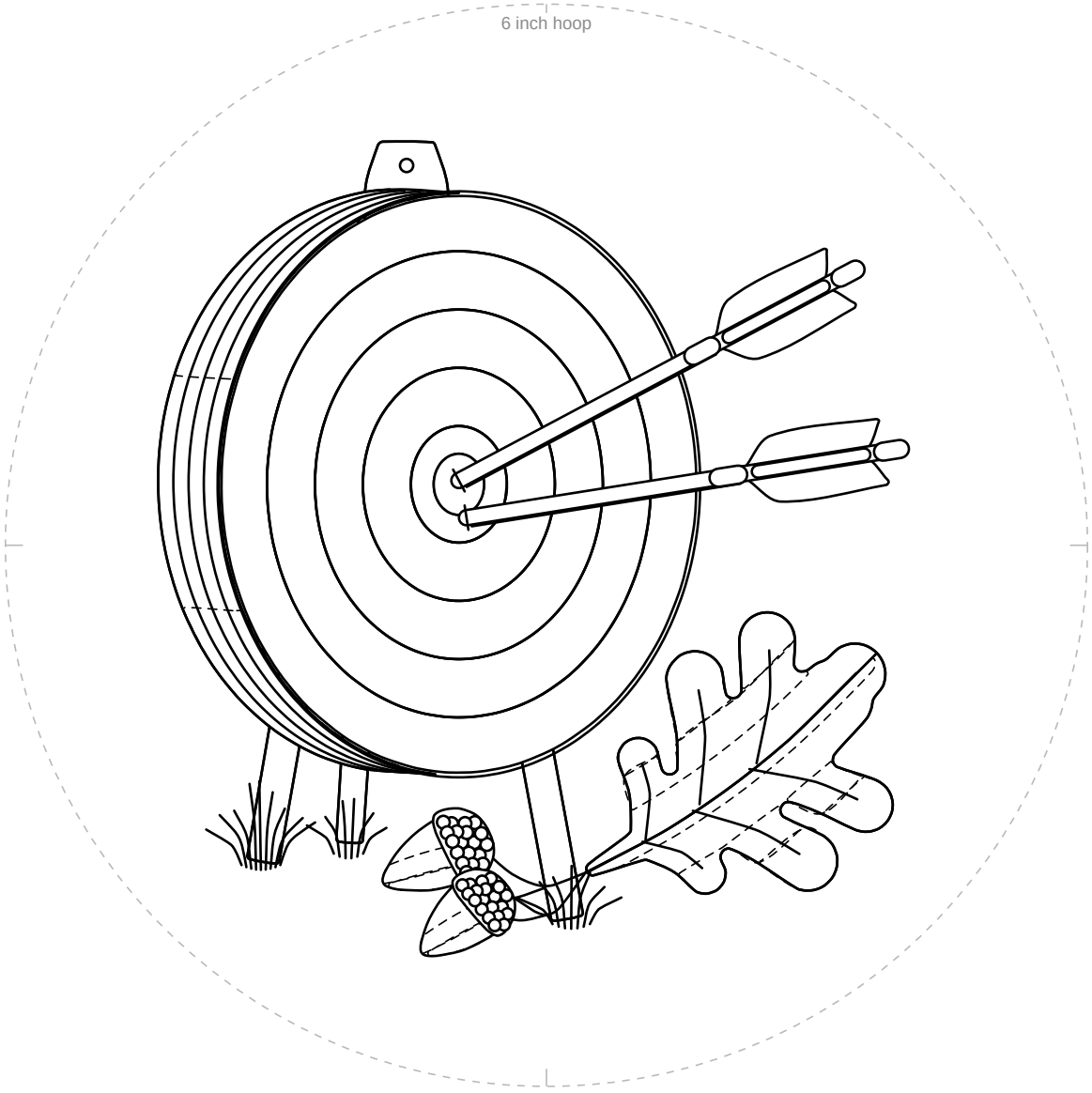

1 in
25.4 mm

Check square: 1 inch (25.4 mm) on each side.
If it measures anything else, print again at 100% with scaling off.

For your own stitching, gifts and handmade pieces you sell. Do not resell or share this PDF or copies of it.

Bullseye target, two arrows and oak leaf

6 inch hoop

Mirrored. Trace this page with an iron-on transfer pen or pencil, then press it ink side down on the fabric.

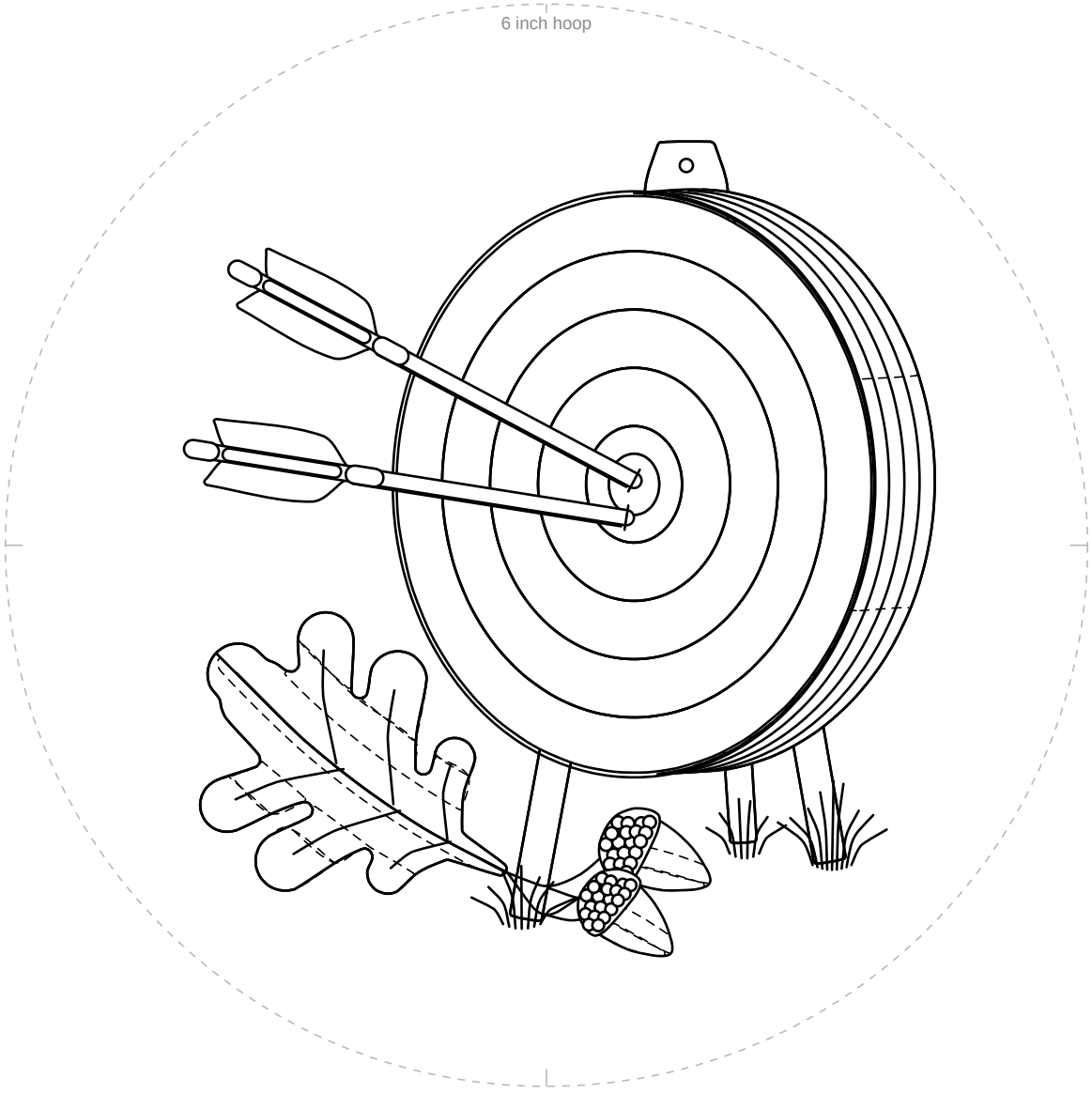

1 in
25.4 mm

Check square: 1 inch (25.4 mm) on each side.
If it measures anything else, print again at 100% with scaling off.

For your own stitching, gifts and handmade pieces you sell. Do not resell or share this PDF or copies of it.