# Bullseye target, two arrows and oak leaf

Sized for a 6 inch hoop (15 cm). The stitched design is about 4.2 × 4.5 in (10.7 × 11.4 cm).



Which color goes where.

## Stitches

- **Long and short stitch**, 1 to 2 strands
  Stand, straw rim, oak leaf
- **Split stitch**, 1 to 2 strands
  Stand, upper arrow shaft, lower arrow shaft
- **Satin stitch**, 2 strands
  Stand, cream ring, ink ring, blue ring, red ring, gold bullseye, upper arrow feathers, upper arrow shaft, upper arrow cock feather, and 7 more
- **French knot**, 2 strands, two wraps
  Stand, acorn cups
- **Stem stitch**, 1 to 4 strands
  Grass, straw rim, ring lines, rim line, oak leaf edge, leaf veins, sprig
- **Padded satin stitch**, 2 strands
  Gold bullseye
- **Straight stitch**, 2 strands
  Entry marks

In a 6 inch hoop the French knots are drawn smaller than about 2 mm (a little over 1/16 in). Use one strand of floss for them there, or choose a larger hoop.

## Floss

- **DMC 898 Very Dark Coffee Brown**
  Stand (dark), rim line, acorn cups and upper arrow shaft (darker) and 2 more parts
- **DMC 433 Medium Brown**
  Stand (middle), acorn cups (lighter), acorns (dark), sprig
- **DMC 435 Very Light Brown**
  Stand (light), straw rim (darkest), acorns (middle)
- **DMC 3363 Medium Pine Green** Grass (middle)
- **DMC 3362 Dark Pine Green** Grass (dark)
- **DMC 3364 Pine Green** Grass (light)
- **DMC 422 Light Hazelnut Brown**
  Straw rim (light), upper arrow shaft and lower arrow shaft (lighter)
- **DMC 3828 Hazelnut Brown** Straw rim (dark)
- **DMC 677 Very Light Old Gold**
  Straw rim (lightest), leaf veins
- **DMC 712 Cream**
  Cream ring, lower arrow cock feather and upper arrow cock feather, ring lines (light)
- **DMC 3799 Very Dark Pewter Gray**
  Ink ring, ring lines (dark)
- **DMC 931 Medium Antique Blue** Blue ring
- **DMC 347 Very Dark Salmon**
  Red ring, arrow bands and nocks (lighter)
- **DMC 783 Medium Topaz**
  Acorns (light), oak leaf (lightest), gold bullseye (darker)
- **DMC 3820 Dark Straw** Gold bullseye (lighter)
- **DMC 782 Dark Topaz** Ring lines (middle)
- **DMC 3328 Dark Salmon** Upper arrow feathers (lighter)
- **DMC 815 Medium Garnet** Upper arrow feathers (darker)
- **DMC 930 Dark Antique Blue**
  Lower arrow feathers, arrow bands and nocks (darker)
- **DMC 932 Light Antique Blue** Lower arrow feathers (lighter)
- **DMC 920 Medium Copper** Oak leaf (dark)
- **DMC 918 Dark Red Copper** Oak leaf edge, oak leaf (darkest)
- **DMC 921 Copper** Oak leaf (middle)
- **DMC 922 Light Copper** Oak leaf (light)

## Three ways to transfer the pattern

1. **Fabric you can see through**
   Tape page 2 to a sunny window or lay it on a light box, tape the fabric over it and trace the lines with a sharp pencil or a water-soluble pen.
2. **Fabric you cannot see through**
   Lay dressmaker's carbon paper colored side down on the fabric with page 2 on top, tape the layers and trace the lines firmly with a ballpoint pen.
3. **Iron-on**
   Go over the lines of page 3, the mirrored page, with an iron-on transfer pen, lay it ink side down on the fabric and press with a dry iron.

Pages 2 and 3 are the pattern at actual size. Print them at 100% with scaling turned off.



For your own stitching, gifts and handmade pieces you sell. Do not resell or share this PDF or copies of it.

# Bullseye target, two arrows and oak leaf

**6 inch hoop**

Print at 100% (actual size). Do not scale or fit to page. Check the square below with a ruler before you trace.

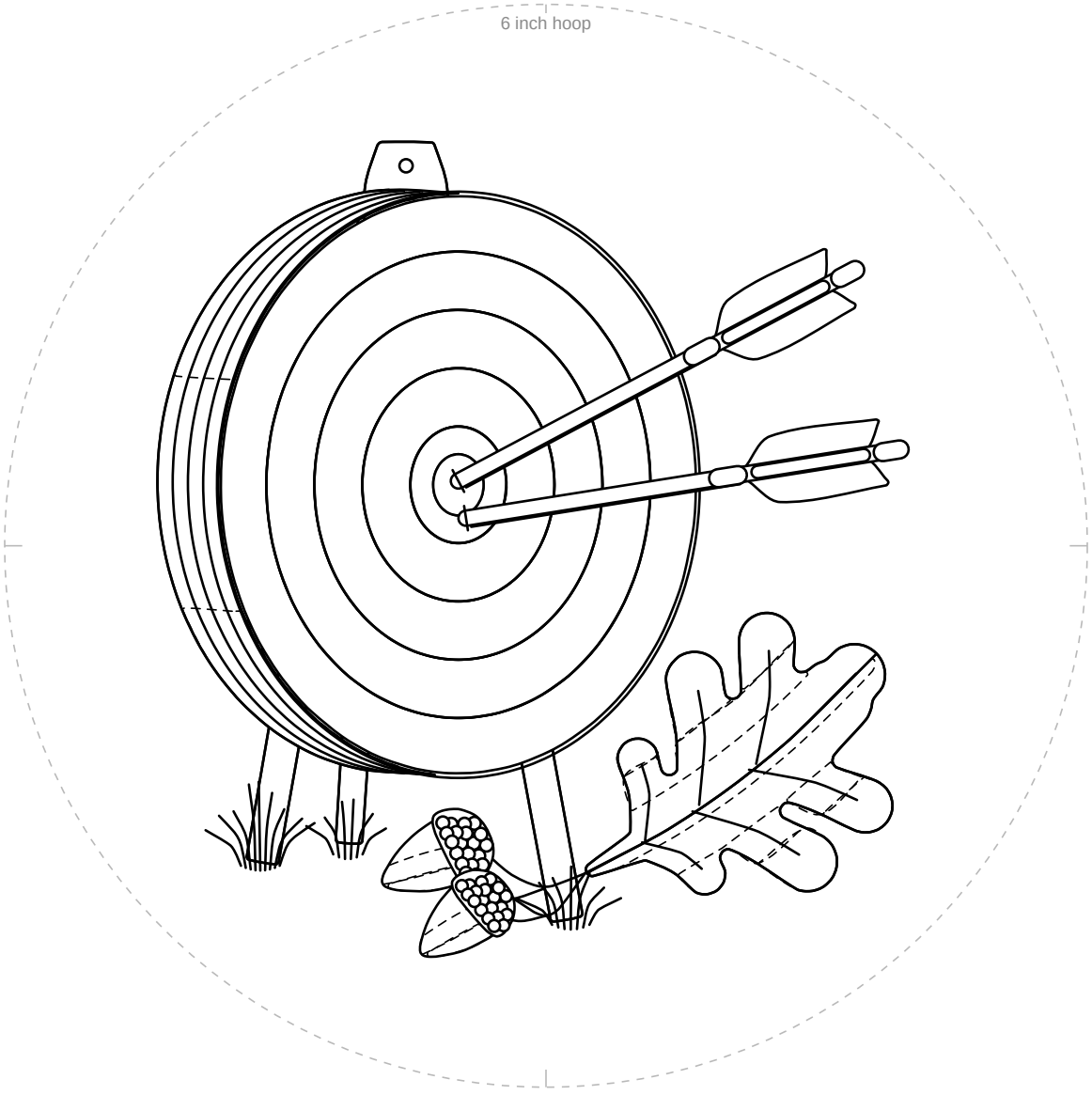


**1 in**
25.4 mm

Check square: 1 inch (25.4 mm) on each side.
If it measures anything else, print again at 100% with scaling off.



For your own stitching, gifts and handmade pieces you sell. Do not resell or share this PDF or copies of it.

# Bullseye target, two arrows and oak leaf

**6 inch hoop**

Mirrored. Trace this page with an iron-on transfer pen or pencil, then press it ink side down on the fabric.

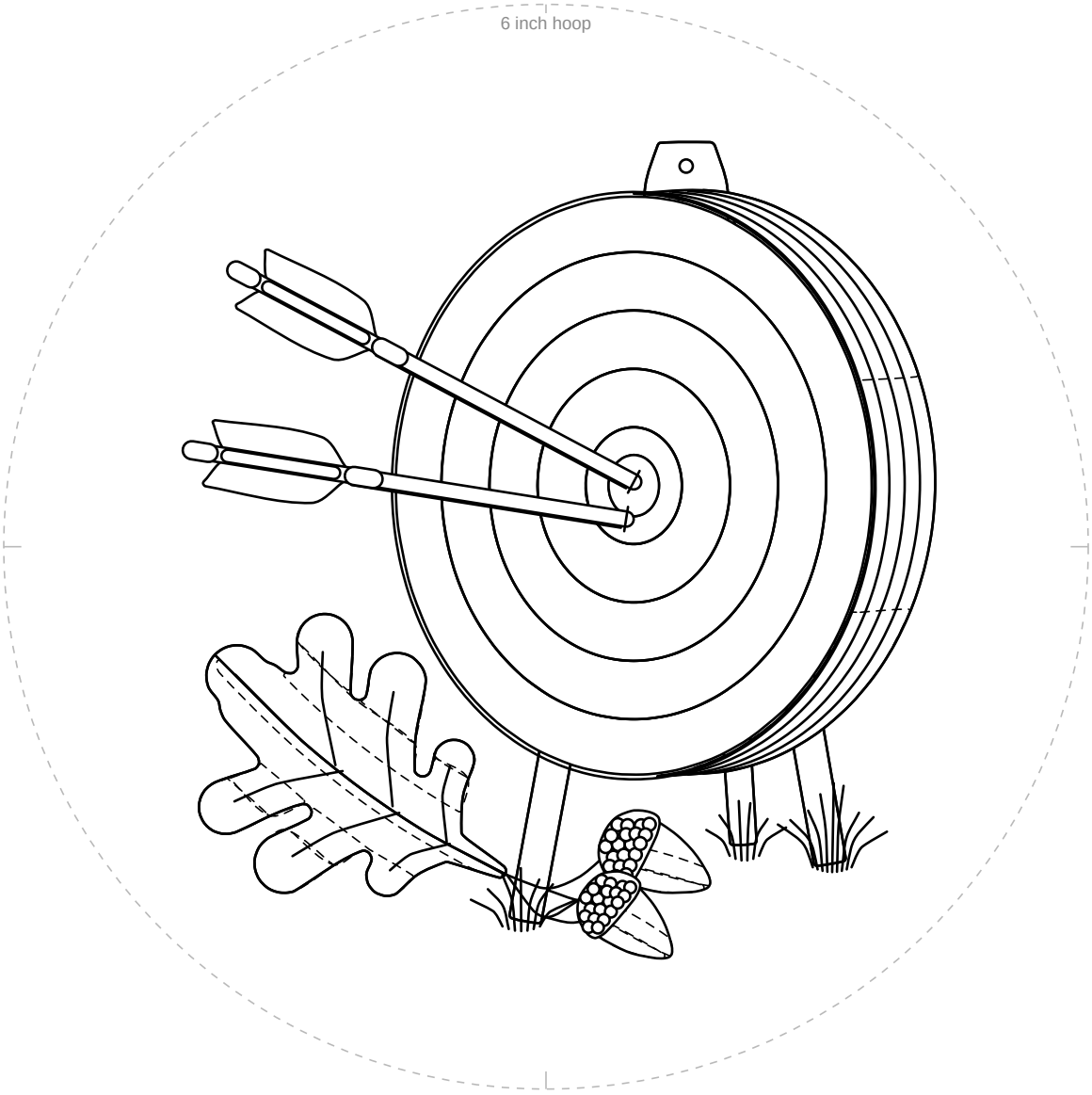


**1 in**
25.4 mm

Check square: 1 inch (25.4 mm) on each side.
If it measures anything else, print again at 100% with scaling off.



For your own stitching, gifts and handmade pieces you sell. Do not resell or share this PDF or copies of it.