Crossed swords behind a round shield

6 inch (15 cm) hoop, 2.9 × 3.9 in (7.4 × 9.9 cm)



Colors by number: page 2.

Stitch in this order

Where a stitch page says otherwise, follow this list.

1. **Satin stitch**, 2 strands
   Blades (each in two halves that meet down its middle, each half slanted to the seam), grips, pommels, guards, boss



2. **Fishbone stitch**, 2 strands
   Leaves on the shield



3. **Stem stitch**, 2 or 3 strands
   Outer circle of the shield, inner circle of the shield, circle round the boss

4. **French knot**
   2 strands, two wraps
   Studs between the circles



Take out lines that still show, press face down, finish the hoop or sew a pillow.

How to read it

Floss has six strands: cut 18 inches (45 cm), pull out the number named one at a time, and lay them together.

Start a filling with tiny stitches, a line with a small knot; end under stitches on the back.

Every stitch in pictures: flossfield.com/embroidery/stitches.

New to this: flossfield.com/embroidery/guides/how-to-start.

Onto the fabric

Fabric you can see through: page 3 taped to a sunny window, the fabric over it; trace.

Other fabric: dressmaker's carbon paper, colored side down, page 3 on top; trace with a ballpoint.

Iron-on pen: go over page 4, the mirrored page, and press it ink side down as the pen's packet says. The lines stay.

Then hoop it, inner ring under, tight as a drum.

Buy: 5 colors of floss (page 2), one skein of each color (an estimate from the drawing's lines and shapes), an embroidery needle size 7, a 6 inch (15 cm) hoop, a 9 inch (23 cm) square of white or light cotton or linen, a water-soluble pen.

For your own stitching, gifts and handmade pieces you sell. Do not resell or share this PDF or copies of it.

Crossed swords behind a round shield

6 inch hoop

A number is a color of the list.

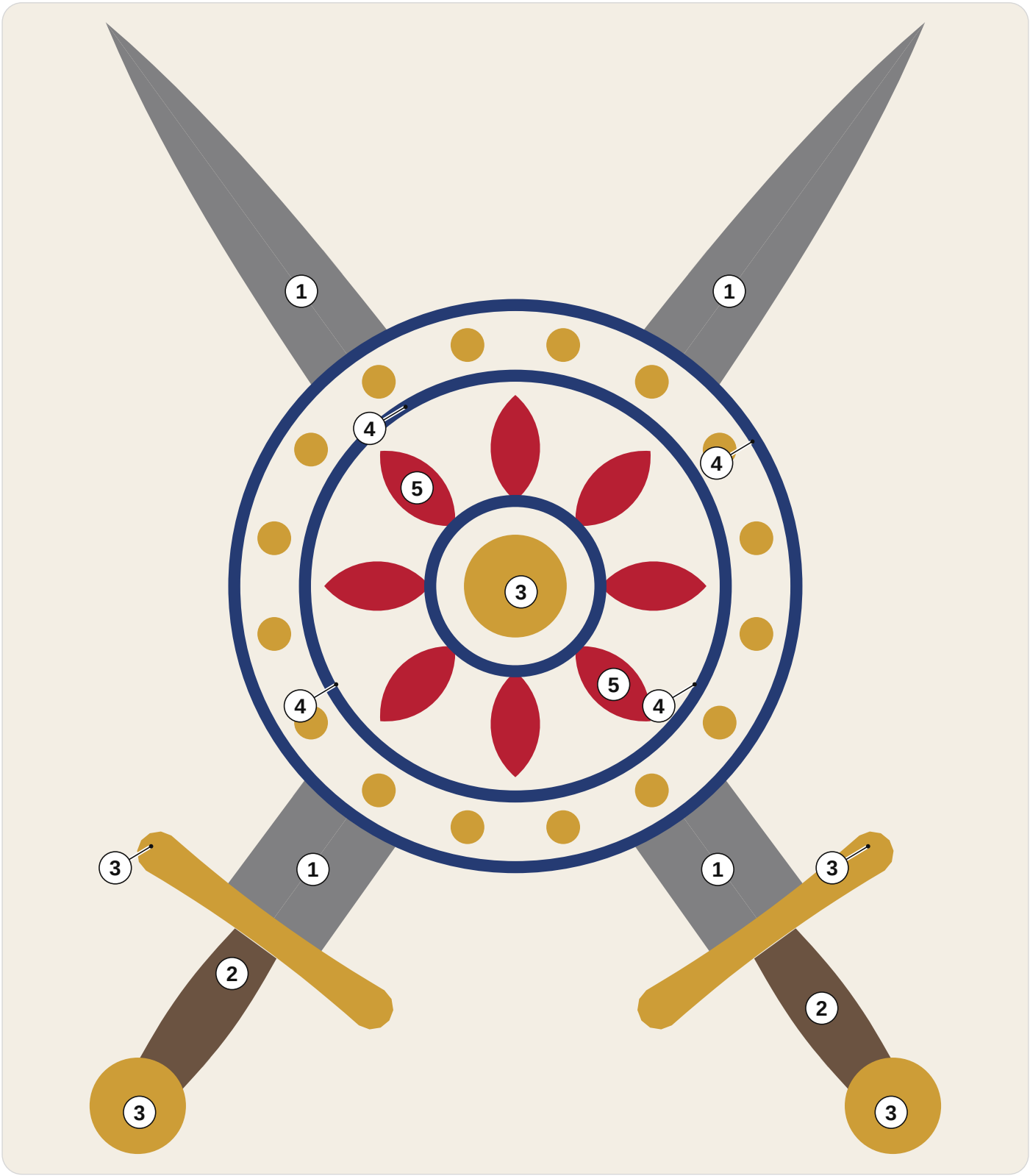

1 DMC 414 Dark Steel Gray
2 DMC 3781 Dark Mocha Brown
3 DMC 3852 Very Dark Straw
4 DMC 336 Navy Blue
5 DMC 304 Medium Red

For your own stitching, gifts and handmade pieces you sell. Do not resell or share this PDF or copies of it.

Crossed swords behind a round shield

6 inch hoop

Print at 100% and measure the square. Trace the black lines only. The gray ring is the hoop: fold the fabric in four and lay the folds on its ticks.
On the drawing a ring is one French knot: mark a dot.

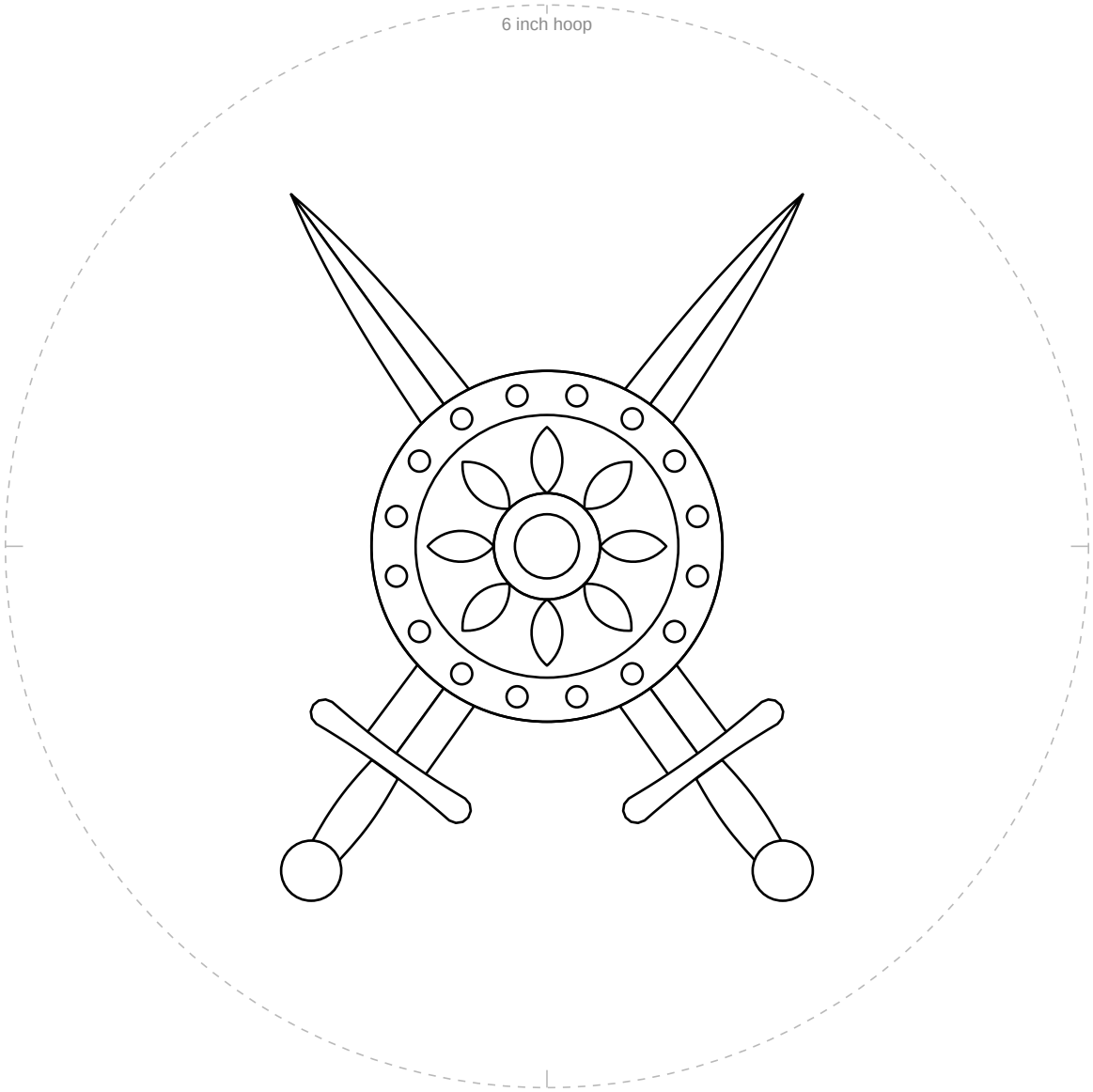

1 in
25.4 mm

Not 1 inch (25.4 mm)? Print again at 100%.

For your own stitching, gifts and handmade pieces you sell. Do not resell or share this PDF or copies of it.

Crossed swords behind a round shield

6 inch hoop

For an iron-on pen only. Go over the lines, press ink side down.

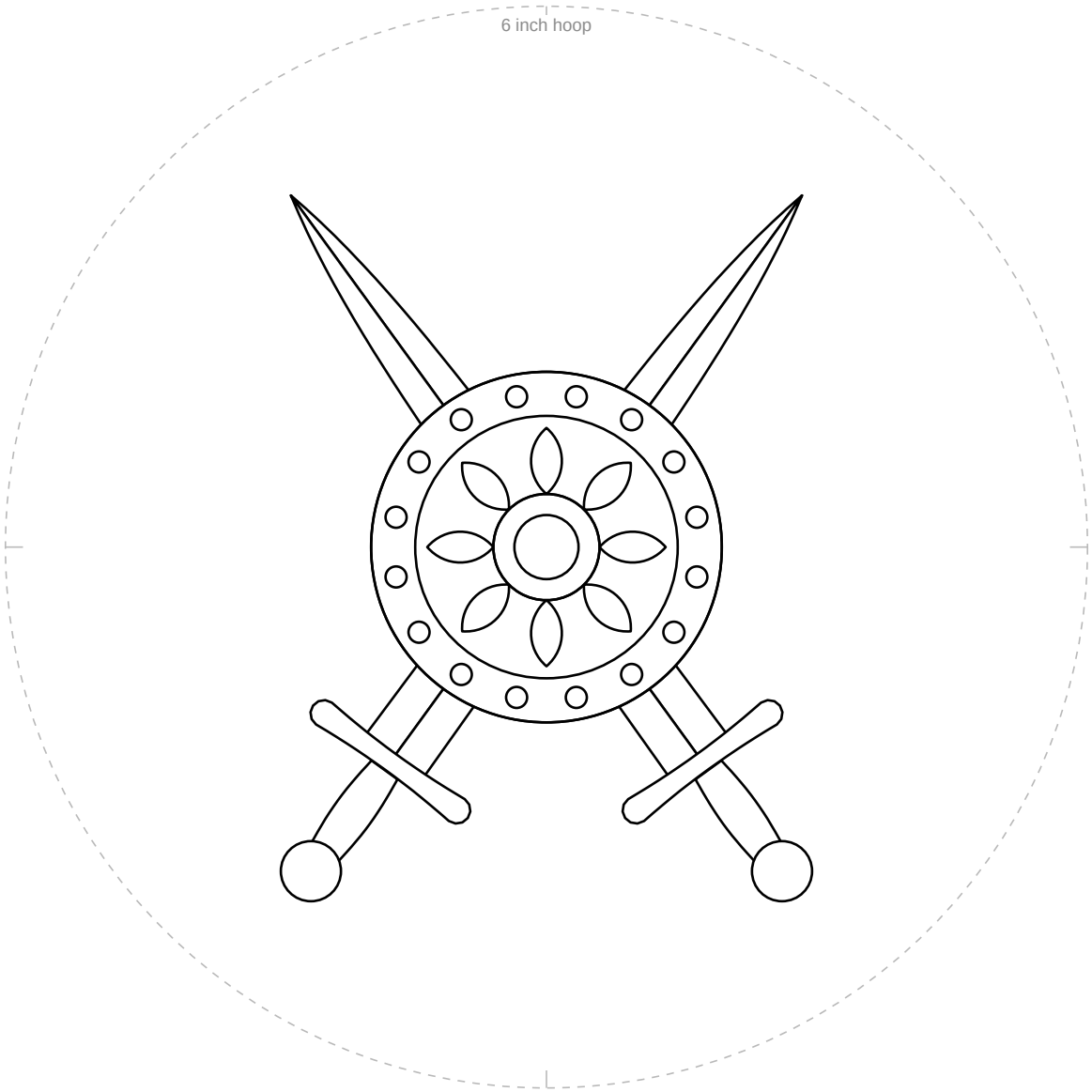

1 in
25.4 mm

Not 1 inch (25.4 mm)? Print again at 100%.

For your own stitching, gifts and handmade pieces you sell. Do not resell or share this PDF or copies of it.