Dartboard seen face on

Sized for a 6 inch hoop (15 cm). The stitched design is about 4.7 × 4.7 in (11.9 × 11.9 cm).

Which color goes where.

Floss

- **DMC 336 Navy Blue**
  Dark wedges and rim of the board
- **DMC 304 Medium Red**
  Red pieces of the treble ring, red pieces of the double ring and bull
- **DMC 320 Medium Pistachio Green**
  Green pieces of the treble ring, green pieces of the double ring and ring round the bull

Stitches

- **Long and short stitch**, 1 or 2 strands
  Dark wedges
- **Satin stitch**, 2 strands
  Red pieces of the treble ring, red pieces of the double ring, green pieces of the treble ring, green pieces of the double ring, ring round the bull, bull, rim of the board

Three ways to transfer the pattern

1. **Fabric you can see through**
   Tape page 2 to a sunny window or lay it on a light box, tape the fabric over it and trace the lines with a sharp pencil or a water-soluble pen.
2. **Fabric you cannot see through**
   Lay dressmaker's carbon paper colored side down on the fabric with page 2 on top, tape the layers and trace the lines firmly with a ballpoint pen.
3. **Iron-on**
   Go over the lines of page 3, the mirrored page, with an iron-on transfer pen, lay it ink side down on the fabric and press with a dry iron.

Pages 2 and 3 are the pattern at actual size. Print them at 100% with scaling turned off.

For your own stitching, gifts and handmade pieces you sell. Do not resell or share this PDF.

Dartboard seen face on

6 inch hoop

Print at 100% (actual size). Do not scale or fit to page. Check the square below with a ruler before you trace.

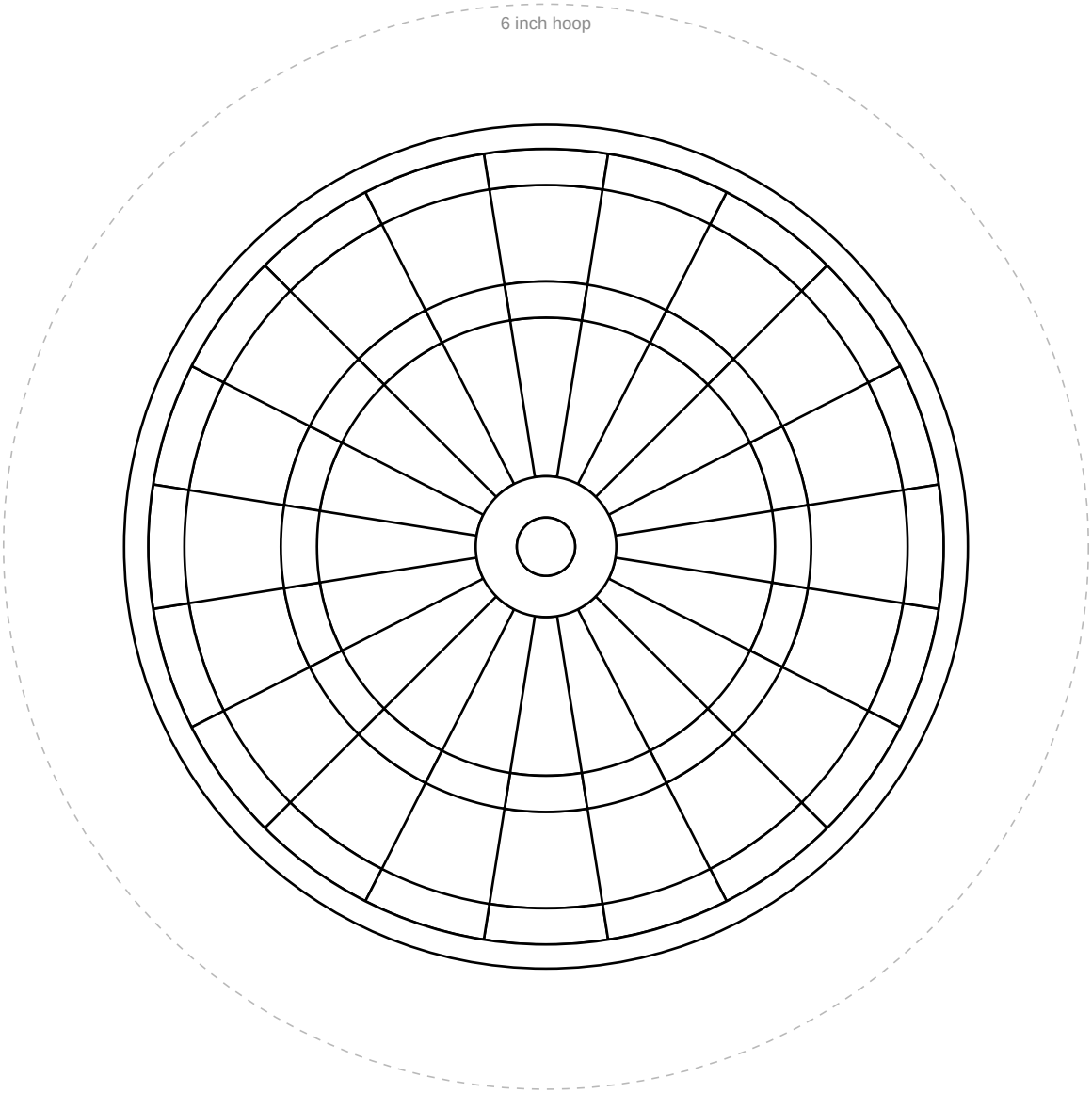

1 in
25.4 mm

Check square: 1 inch (25.4 mm) on each side.
If it measures anything else, print again at 100% with scaling off.

For your own stitching, gifts and handmade pieces you sell. Do not resell or share this PDF.

Dartboard seen face on

6 inch hoop

Mirrored. Trace this page with an iron-on transfer pen or pencil, then press it ink side down on the fabric.

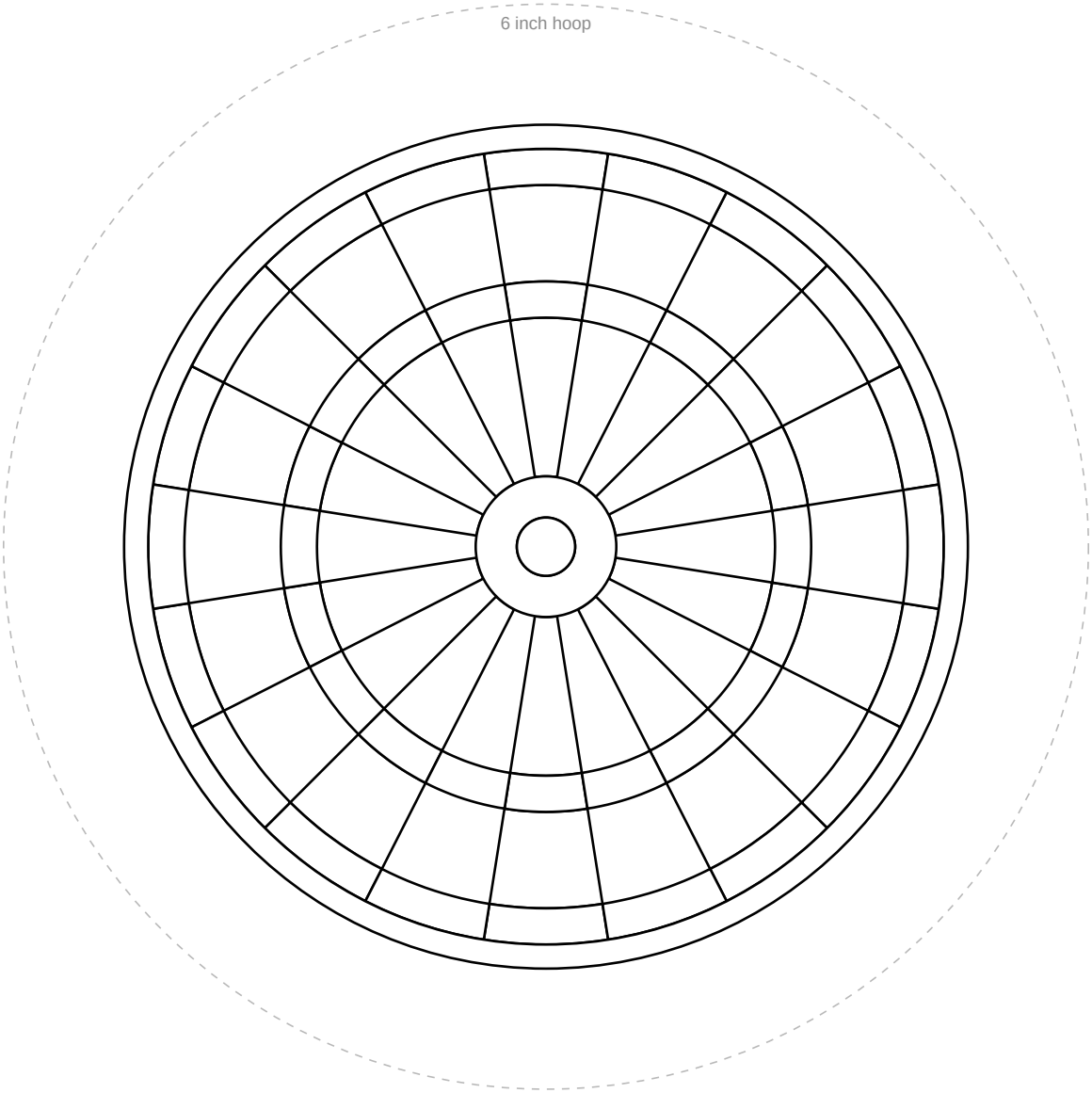

1 in
25.4 mm

Check square: 1 inch (25.4 mm) on each side.
If it measures anything else, print again at 100% with scaling off.

For your own stitching, gifts and handmade pieces you sell. Do not resell or share this PDF.