Director’s chair with room for a name

Sized for a 6 inch hoop (15 cm). The stitched design is about 3.6 × 3.9 in (9.1 × 9.9 cm).

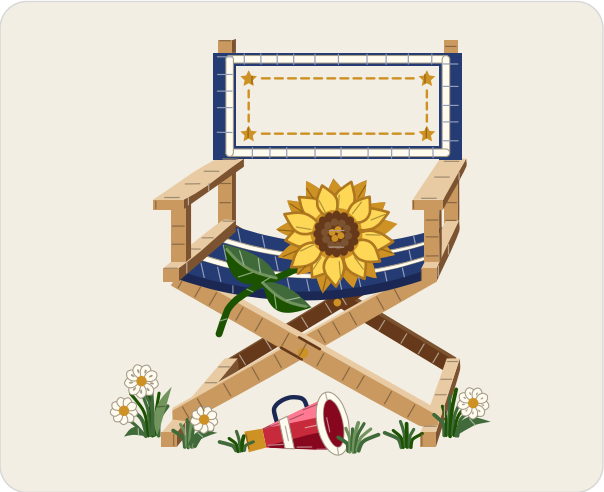

Which color goes where.

Stitches

- **Satin stitch**, 2 strands
  Far legs, runners, back posts, near legs, seat, seat stripes, seat edge, seat rails, arm posts, arms, canvas hems, canvas sleeves, stars, and 7 more
- **Split stitch**, 1 strand
  Crossing line, petal edges
- **Chain stitch**, 2 strands
  Canvas border
- **Running stitch**, 3 strands
  Name frame
- **French knot**, 2 strands, two wraps
  Bolts, sunflower seeds, daisy hearts
- **Fishbone stitch**, 2 strands
  Leaves
- **Stem stitch**, 1 to 4 strands
  Leaves, megaphone grip, grass, daisy stems
- **Long and short stitch**, 1 strand
  Sunflower petals, megaphone
- **Lazy daisy stitch**, 3 strands
  Daisies

In a 6 inch hoop the French knots and the shortest lazy daisy loops are drawn smaller than about 2 mm (a little over 1/16 in). Use one strand of floss for them there, or choose a larger hoop.

Floss

- **DMC 433 Medium Brown**
  Far legs (lighter), runners, seat rails and arms (dark) and 3 more parts
- **DMC 801 Dark Coffee Brown**
  Far legs (darker), sunflower center and crossing line, sunflower seeds (dark)
- **DMC 738 Very Light Tan**
  Near legs (lighter), arms, runners and seat rails (light)
- **DMC 436 Tan**
  Near legs (darker), back posts and arm posts (lighter), arms (middle) and 2 more parts
- **DMC 336 Navy Blue**
  Seat, canvas hems and canvas sleeves
- **DMC 712 Cream**
  Canvas border, seat stripes, megaphone rim, daisies and megaphone band
- **DMC 939 Very Dark Navy Blue**
  Seat edge and megaphone grip
- **DMC 783 Medium Topaz**
  Sunflower petals (middle), name frame, stars and mouthpiece and 3 more parts
- **DMC 895 Very Dark Hunter Green**
  Grass and leaves (dark), sunflower stem
- **DMC 3346 Hunter Green**
  Grass and leaves (middle), grass leaves (darker), daisy stems
- **DMC 3347 Medium Yellow Green**
  Grass and leaves (light), grass leaves (lighter)
- **DMC 782 Dark Topaz**
  Sunflower petals (dark), petal edges
- **DMC 726 Light Topaz** Sunflower petals (light)
- **DMC 321 Red** Megaphone (middle)
- **DMC 815 Medium Garnet**
  Megaphone (dark), megaphone mouth
- **DMC 3705 Dark Melon** Megaphone (light)

Three ways to transfer the pattern

1. **Fabric you can see through**
   Tape page 2 to a sunny window or lay it on a light box, tape the fabric over it and trace the lines with a sharp pencil or a water-soluble pen.
2. **Fabric you cannot see through**
   Lay dressmaker’s carbon paper colored side down on the fabric with page 2 on top, tape the layers and trace the lines firmly with a ballpoint pen.
3. **Iron-on**
   Go over the lines of page 3, the mirrored page, with an iron-on transfer pen, lay it ink side down on the fabric and press with a dry iron.

Pages 2 and 3 are the pattern at actual size. Print them at 100% with scaling turned off.

For your own stitching, gifts and handmade pieces you sell. Do not resell or share this PDF.

Director’s chair with room for a name

6 inch hoop

Print at 100% (actual size). Do not scale or fit to page. Check the square below with a ruler before you trace.

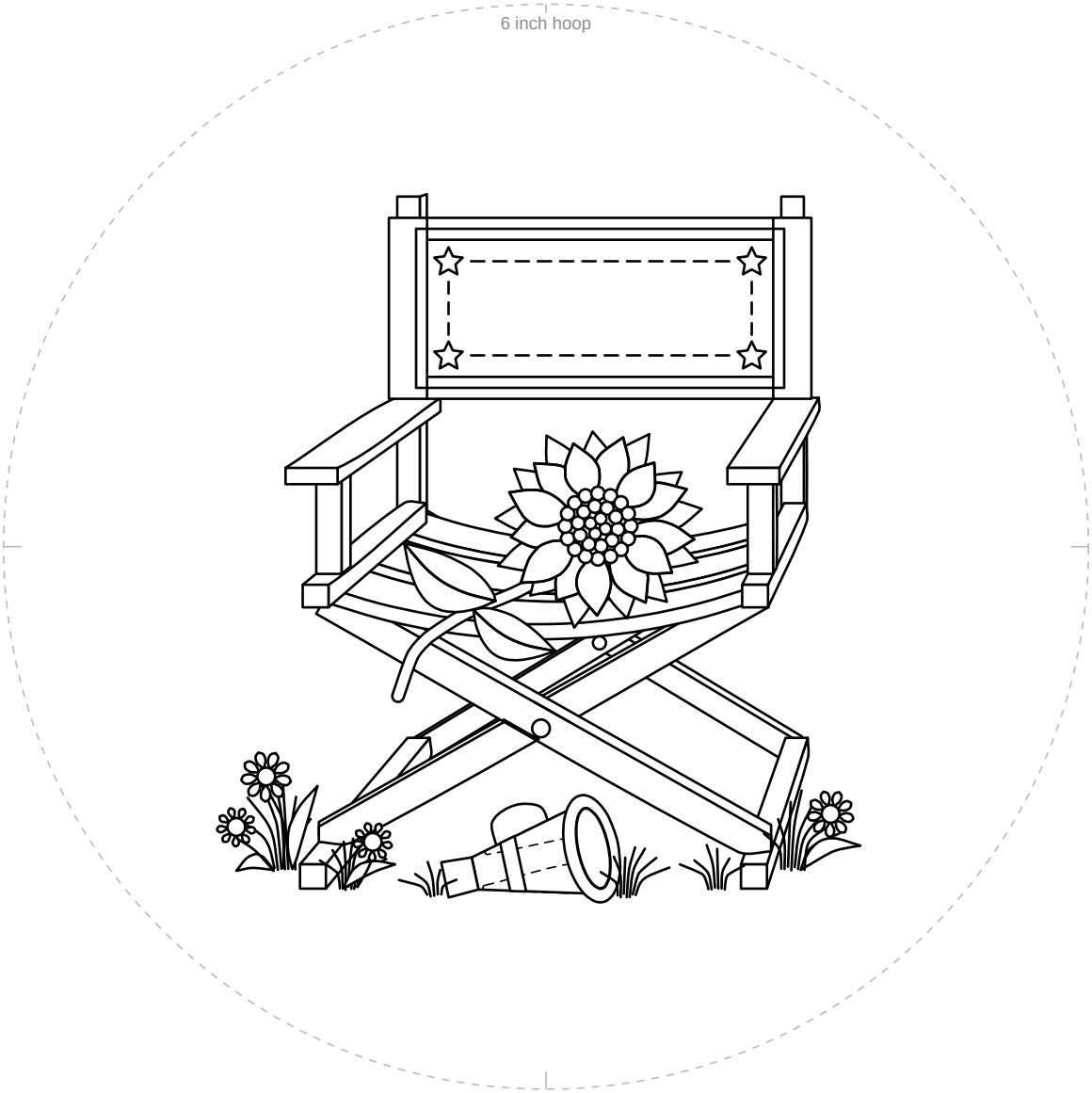

1 in
25.4 mm

Check square: 1 inch (25.4 mm) on each side.
If it measures anything else, print again at 100% with scaling off.

For your own stitching, gifts and handmade pieces you sell. Do not resell or share this PDF.

Director’s chair with room for a name

6 inch hoop

Mirrored. Trace this page with an iron-on transfer pen or pencil, then press it ink side down on the fabric.

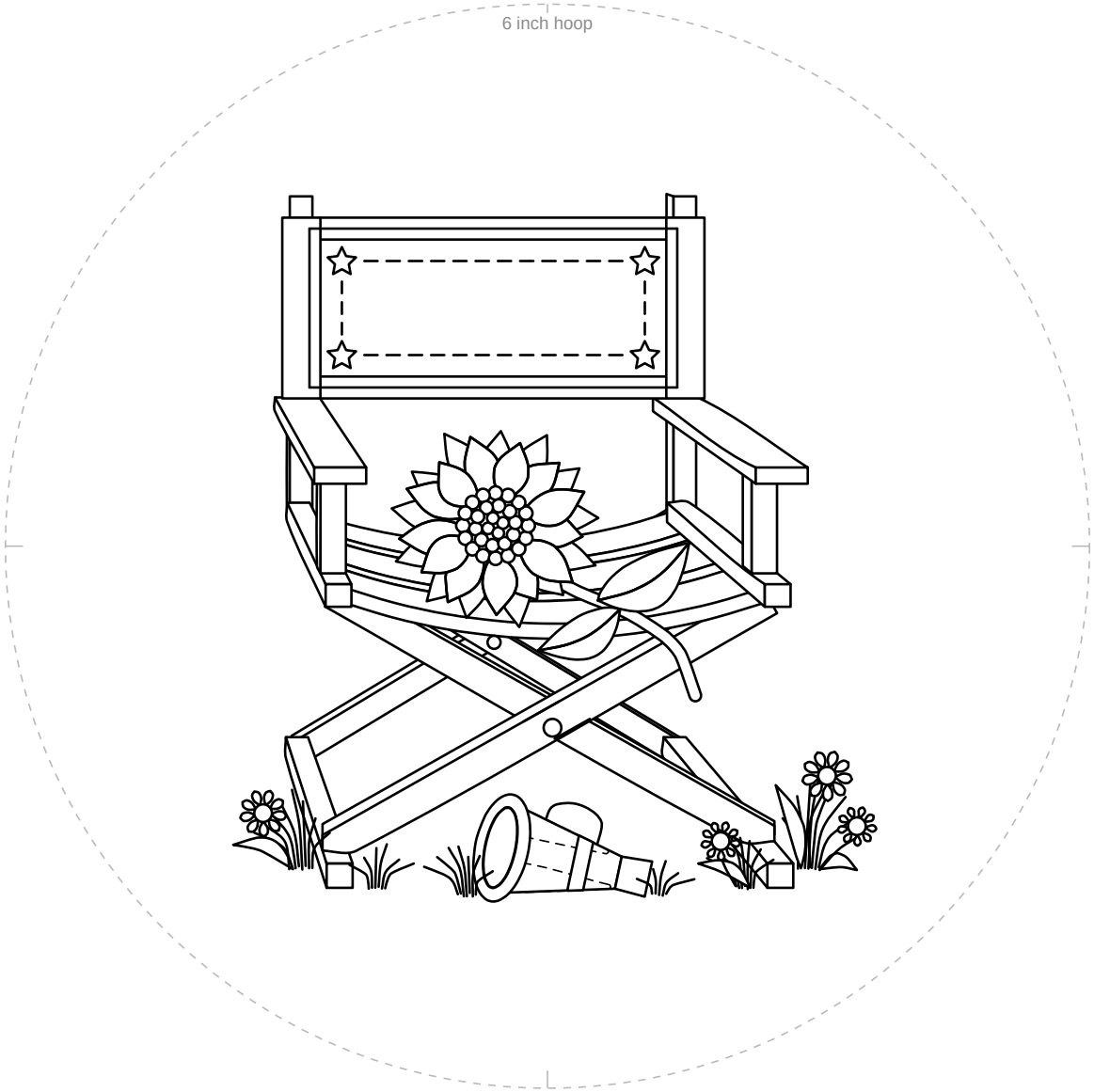

1 in
25.4 mm

Check square: 1 inch (25.4 mm) on each side.
If it measures anything else, print again at 100% with scaling off.

For your own stitching, gifts and handmade pieces you sell. Do not resell or share this PDF.