Lemon slice

6 inch (15 cm) hoop, 4.6 × 4.6 in (11.7 × 11.7 cm)



Colors.

What you need

A 6 inch (15 cm) hoop.

A 9 inch (23 cm) square of white or light cotton or linen.

An embroidery needle, size 7.

2 skeins of DMC 726; one of each other color (an estimate from the drawing's lines and shapes).

A water-soluble pen, and small scissors.

Onto the fabric

Fabric you can see through: page 2 taped to a sunny window, the fabric over it; trace.

Other fabric: dressmaker's carbon paper, colored side down, page 2 on top; trace with a ballpoint.

Iron-on pen: go over page 3, the mirrored page, and press it ink side down as the pen's packet says. The lines stay.

Then hoop it, inner ring under, tight as a drum.

How to read it

Floss has six strands: cut 18 inches (45 cm), pull out the number named one at a time, and lay them together.

Start each part with tiny stitches that it covers, never a knot; end under stitches on the back.

Every stitch in pictures: flossfield.com/embroidery/stitches.

New to this: flossfield.com/embroidery/guides/how-to-start.

Floss

DMC 3852 Very Dark Straw
Peel

DMC 726 Light Topaz
Segments

DMC B5200 Snow White
Heart of the slice

Stitch in this order

Where a stitch page says otherwise, follow this list.

1. **Satin stitch**, 2 strands
   Peel, segments (each in two halves that meet down its middle, each half slanted to the seam), heart of the slice



Take out lines that still show, press face down, finish the hoop.

In a 6 inch hoop the widest satin stitch shape is 1/2 in (13 mm) across. Satin stitches longer than about 12 mm (just under 1/2 in) tend to work loose: divide the shape into sections, or work it in long and short stitch.

For your own stitching, gifts and handmade pieces you sell. Do not resell or share this PDF or copies of it.

Lemon slice

6 inch hoop

Print at 100% and measure the square. Trace the black lines only. The gray ring is the hoop: fold the fabric in four and lay the folds on its ticks.

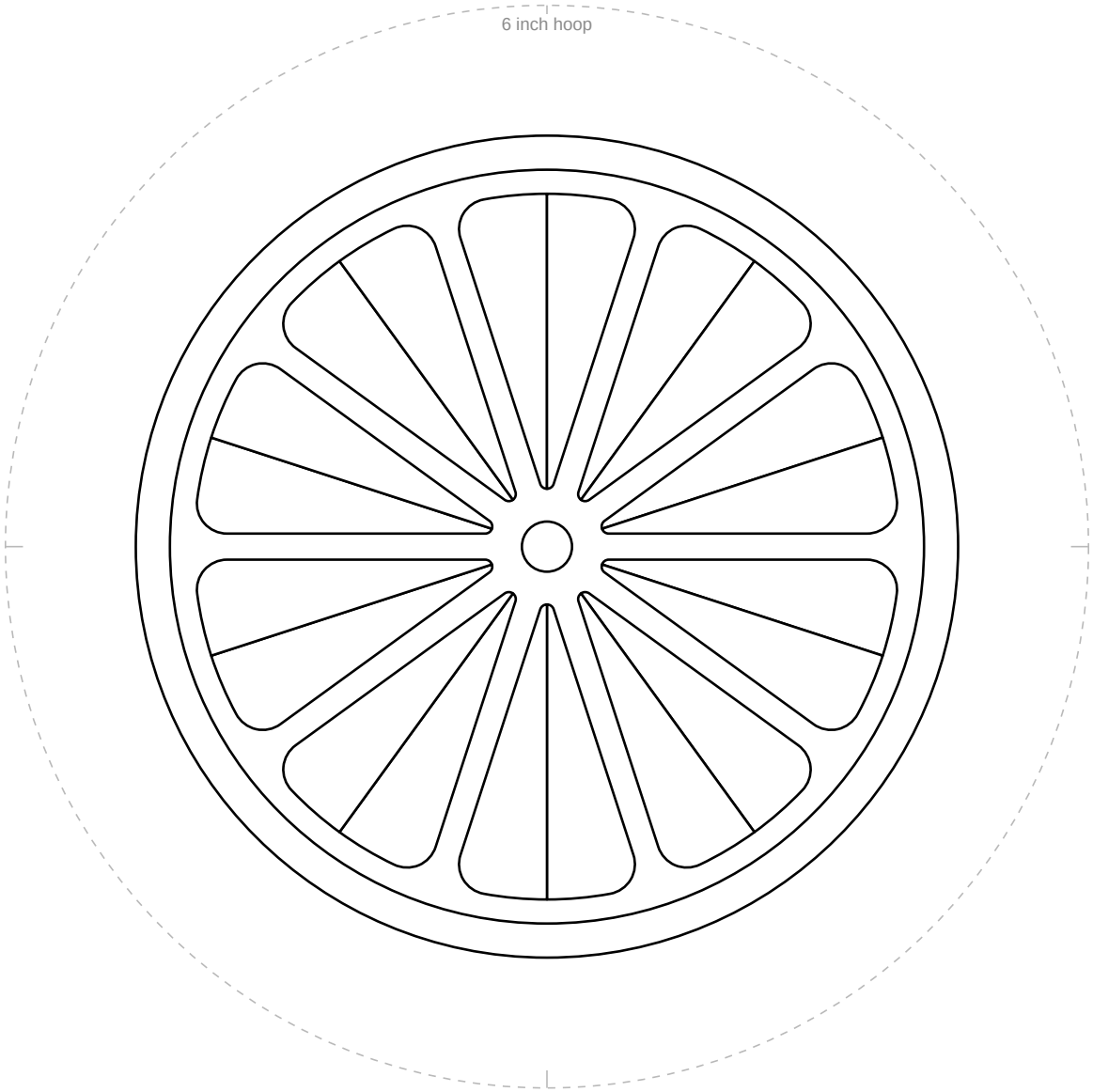

1 in
25.4 mm

Not 1 inch (25.4 mm)? Print again at 100%.

For your own stitching, gifts and handmade pieces you sell. Do not resell or share this PDF or copies of it.

Lemon slice

6 inch hoop

For an iron-on pen only. Go over the lines, press ink side down.

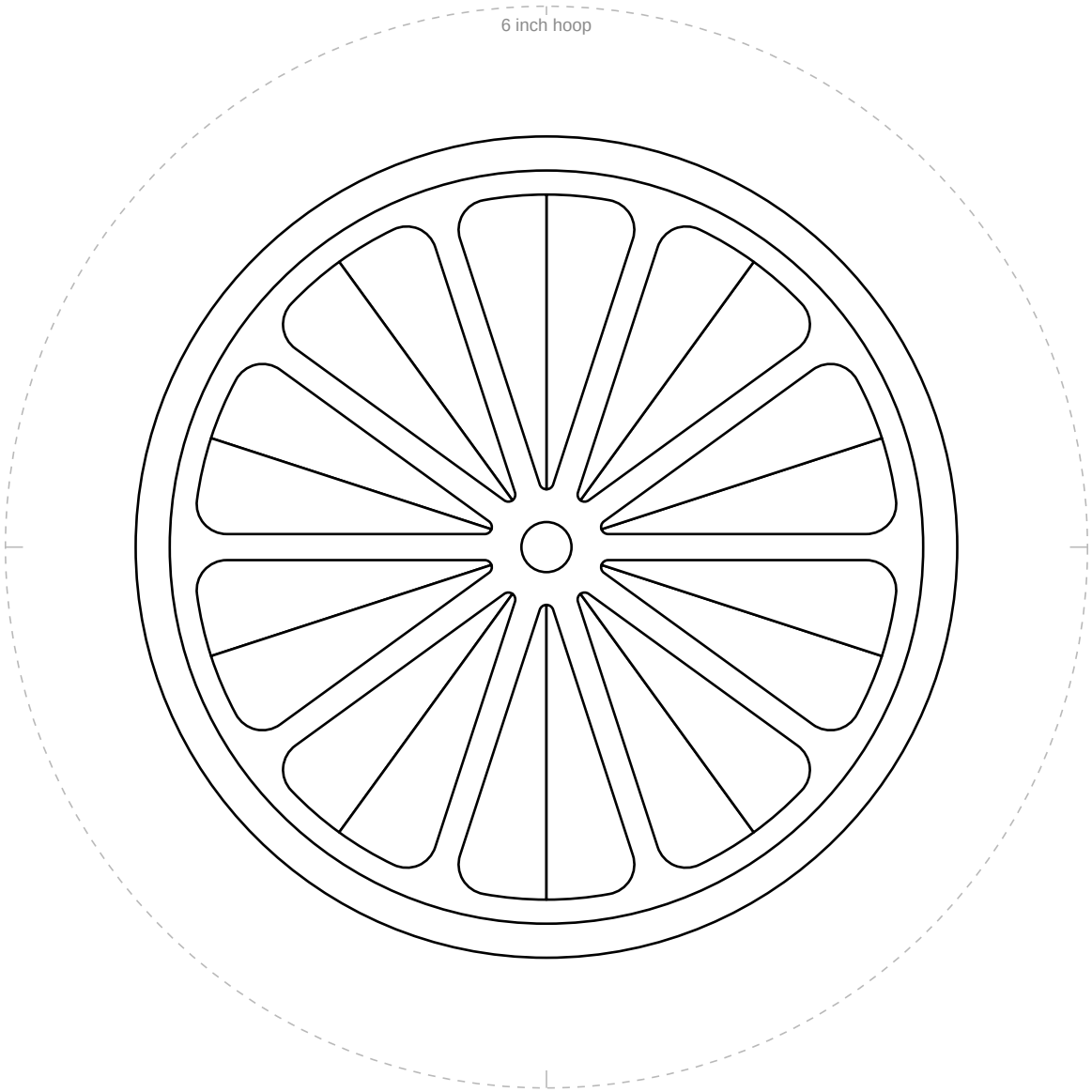

1 in
25.4 mm

Not 1 inch (25.4 mm)? Print again at 100%.

For your own stitching, gifts and handmade pieces you sell. Do not resell or share this PDF or copies of it.