Monster truck jumping at sunset

Sized for a 6 inch hoop (15 cm). The stitched design is about 4.6 × 4.7 in (11.7 × 11.9 cm).



Which color goes where.

Stitches

- **Satin stitch**, 2 strands
  Frame, sunset stripes, mesas, ground, dirt ramp, ramp top, far tires, wheel wells, link bars, chassis, shock rods, springs, tires, and 17 more
- **Long and short stitch**, 1 strand
  Sun, dust, tires
- **Stem stitch**, 2 to 4 strands
  Cream lines, frame edge, ramp lines, dust curls, tire light, tire rings, truck edge, crease line, fender flares, headlights
- **Straight stitch**, 1 to 3 strands
  Door seams, door handle, grille slats, window shine

Three ways to transfer the pattern

1. **Fabric you can see through**
   Tape page 2 to a sunny window or lay it on a light box, tape the fabric over it and trace the lines with a sharp pencil or a water-soluble pen.
2. **Fabric you cannot see through**
   Lay dressmaker's carbon paper colored side down on the fabric with page 2 on top, tape the layers and trace the lines firmly with a ballpoint pen.
3. **Iron-on**
   Go over the lines of page 3, the mirrored page, with an iron-on transfer pen, lay it ink side down on the fabric and press with a dry iron.

Pages 2 and 3 are the pattern at actual size. Print them at 100% with scaling turned off.

Floss

- **DMC 154 Very Dark Grape**
  Frame, sunset stripes (darkest), mesas (darker)
- **DMC 3854 Medium Autumn Gold**
  Sunset stripes (lightest), frame edge and wheel centers and 2 more parts
- **DMC 3340 Medium Apricot**
  Sunset stripes (light), springs, hub caps and tail light, side stripes (dark)
- **DMC 3777 Very Dark Terra Cotta**
  Sunset stripes (middle dark), ground (middle)
- **DMC 3835 Medium Grape**
  Sunset stripes (middle light)
- **DMC 3834 Dark Grape**
  Sunset stripes (dark), mesas (lighter)
- **DMC 3820 Dark Straw** Sun (dark)
- **DMC 3822 Light Straw** Sun (middle)
- **DMC 745 Light Pale Yellow**
  Sun (light), headlights and roof lamps (lighter)
- **DMC 746 Off White**
  Cream lines and wheel rims, cab frame (lighter), dust (lightest) and 3 more parts
- **DMC 436 Tan** Ground (light), dust (dark), ramp lines
- **DMC 898 Very Dark Coffee Brown**
  Ground (dark), dirt ramp (darker)
- **DMC 433 Medium Brown**
  Dirt ramp (lighter), dust curls, dust (darkest)
- **DMC 738 Very Light Tan**
  Dust (light), cab frame (darker), ramp top
- **DMC 310 Black**
  Tires (darkest), far tires, wheel wells and wheel windows
- **DMC 3799 Very Dark Pewter Gray**
  Tires (dark), chassis and truck edge, roof lamps (darker) and 4 more parts
- **DMC 317 Pewter Gray**
  Tire lugs and tire light (lighter), tire rings, tires (lightest)
- **DMC 415 Pearl Gray** Link bars and bumper
- **DMC 413 Dark Pewter Gray**
  Tire lugs (darker), tires (light), shock rods
- **DMC 3808 Ultra Very Dark Turquoise**
  Truck front, truck body (dark)
- **DMC 3810 Dark Turquoise**
  Truck body (light), truck hood (lighter), crease line and window shine
- **DMC 3809 Very Dark Turquoise**
  Truck body (middle), truck hood (darker)
- **DMC 939 Very Dark Navy Blue**
  Windows and windshield

For your own stitching, gifts and handmade pieces you sell. Do not resell or share this PDF.

Monster truck jumping at sunset

6 inch hoop

Print at 100% (actual size). Do not scale or fit to page. Check the square below with a ruler before you trace.

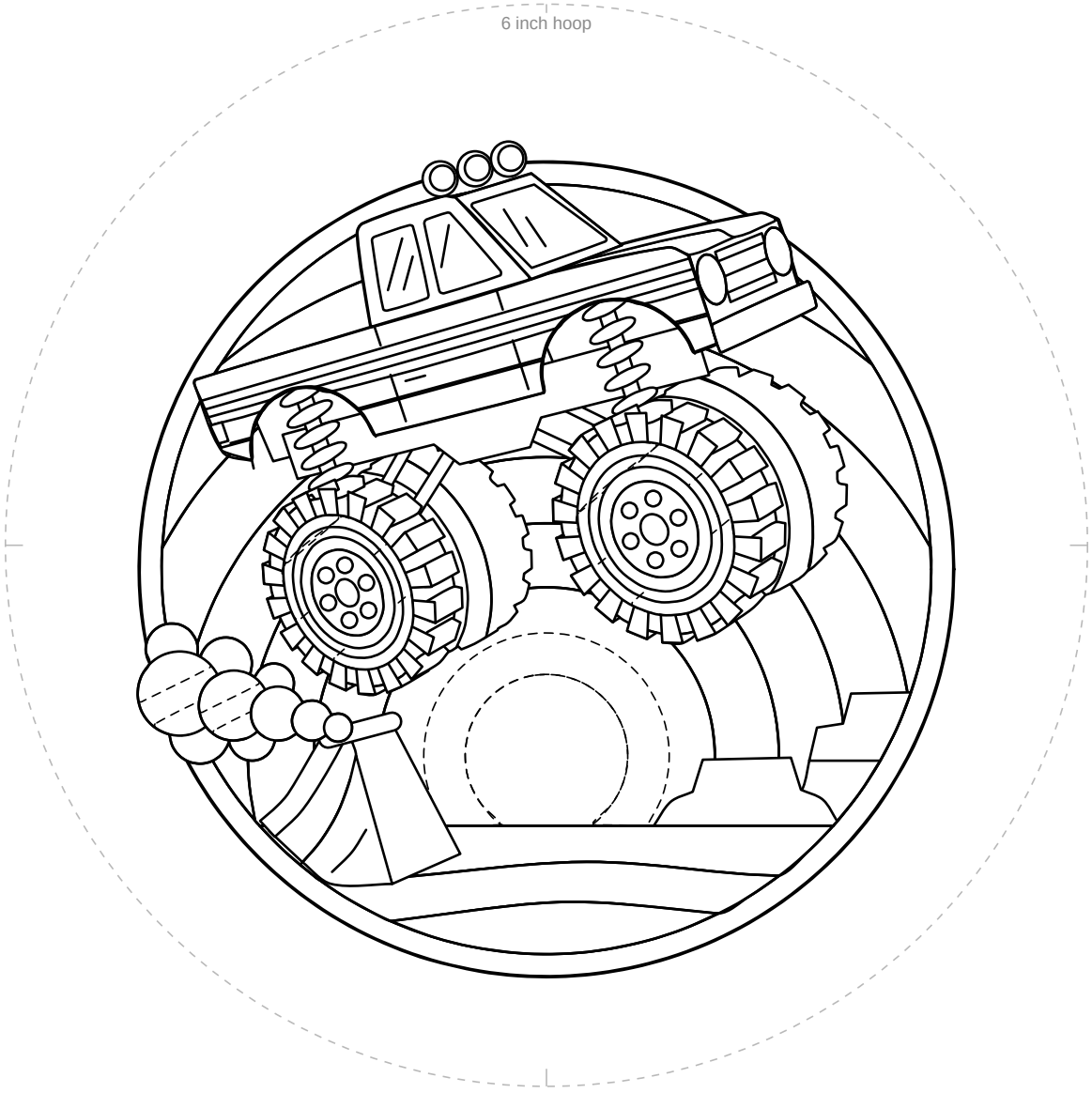

1 in
25.4 mm

Check square: 1 inch (25.4 mm) on each side.
If it measures anything else, print again at 100% with scaling off.

For your own stitching, gifts and handmade pieces you sell. Do not resell or share this PDF.

Monster truck jumping at sunset

6 inch hoop

Mirrored. Trace this page with an iron-on transfer pen or pencil, then press it ink side down on the fabric.

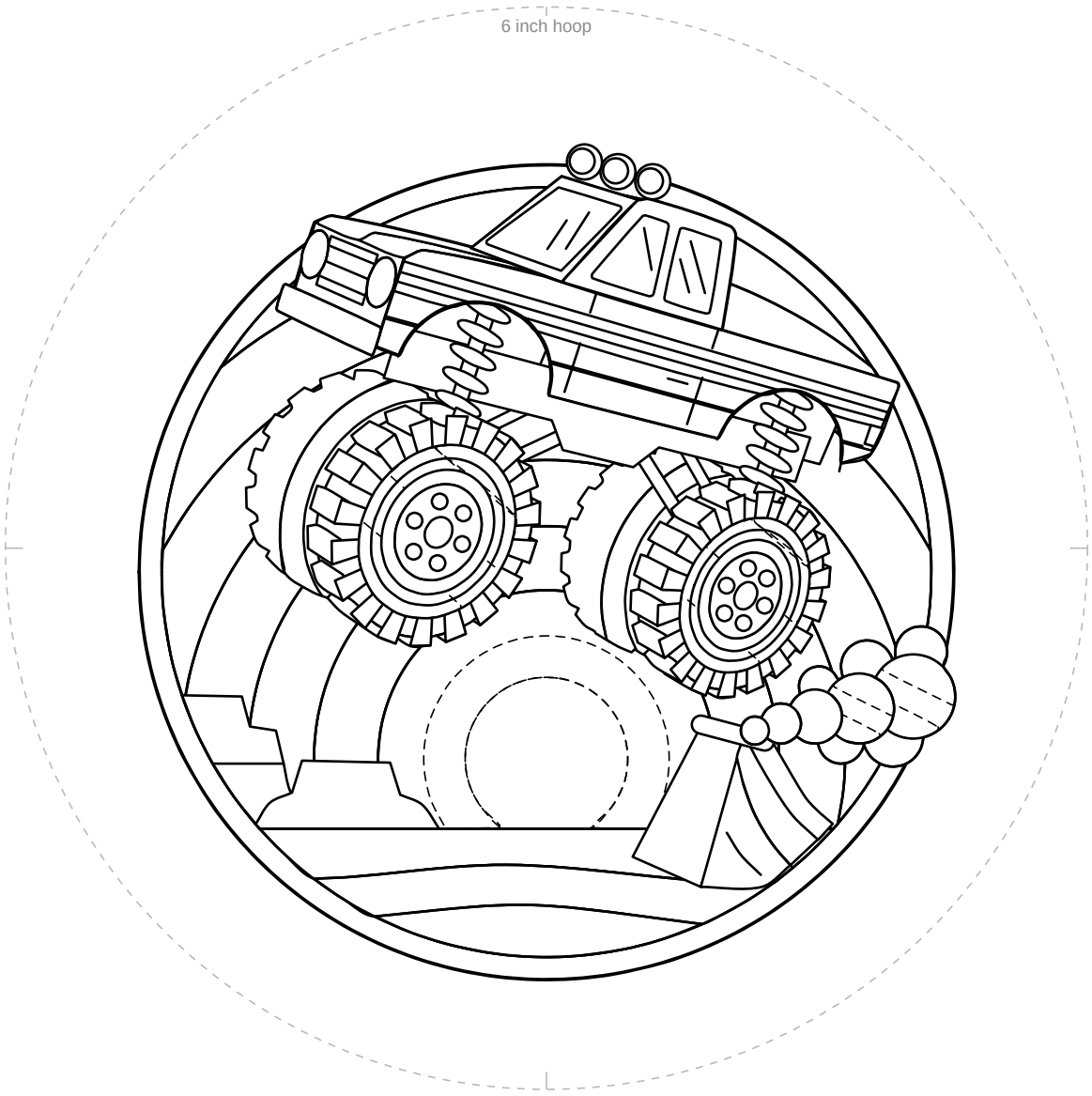

1 in
25.4 mm

Check square: 1 inch (25.4 mm) on each side.
If it measures anything else, print again at 100% with scaling off.

For your own stitching, gifts and handmade pieces you sell. Do not resell or share this PDF.