Beaded panther chameleon portrait

Sized for a 6 inch hoop (15 cm). The stitched design is about 4.5 × 4.1 in (11.4 × 10.4 cm).



Which color goes where: by number on page 2.
Fabric: black cotton or linen.

Stitch in this order

Filled parts from the back of the picture forward, then lines and knots.

1. **Satin stitch**, 2 strands
   Neck crest, throat crest, lip stripe, eye rings, iris, pupil, nostril
2. **Long and short stitch**, 1 strand
   Neck, throat and jaw, head, turret eye, brow
3. **Split stitch**, strands by part on page 2
   Mouth, brow
4. **Straight stitch**, 1 strand
   Eye light
5. **French knot**
   strands by part on page 2, two wraps
   Eye scales, scales, snout ridge, brow, casque ridge

Three ways onto dark fabric

1. **Light shines through it**
   Lay page 3 on a bright light box, tape the fabric over it and trace the lines with a white marking pencil or pen.
2. **No light shines through**
   Print page 3 on a sticky wash-away sheet, smooth it onto fabric that can be washed, stitch through both and rinse it away.
3. **White or yellow carbon paper**
   Lay it colored side down on the fabric with page 3 on top, tape the layers and trace firmly with a ballpoint pen. Go over a faint line with a white pencil.

Page 3 is the pattern at actual size (page 4 is its mirror, for an iron-on pen on a light fabric). Print it at 100% with scaling turned off. Then put the fabric in the hoop: inner ring under, drawing up, tight as a drum.

Floss

- **1 DMC 964 Light Seagreen**
  Head (shade 10 of 10), turret eye and scales (shade 8 of 8) and 3 more parts
- **2 DMC 958 Dark Seagreen**
  Neck (shade 9 of 9), eye rings (shade 5 of 7), neck crest (middle)
- **3 DMC 911 Medium Emerald Green**
  Neck (shade 7 of 9), throat and jaw (shade 5 of 7) and 3 more parts
- **4 DMC 500 Very Dark Blue Green**
  Neck (shade 2 of 9)
- **5 DMC 3818 Ultra Very Dark Emerald Green**
  Neck (shade 3 of 9), throat and jaw (shade 1 of 7) and 3 more parts
- **6 DMC 815 Medium Garnet**
  Neck (shade 1 of 9), eye rings (shade 2 of 7)
- **7 DMC 349 Dark Coral**
  Neck (shade 4 of 9), head (shade 2 of 10), turret eye (shade 1 of 8) and 2 more parts
- **8 DMC 350 Medium Coral**
  Neck (shade 6 of 9), head (shade 4 of 10), turret eye (shade 3 of 8) and 2 more parts
- **9 DMC 3765 Very Dark Peacock Blue**
  Head (shade 3 of 10), turret eye (shade 2 of 8) and 5 more parts
- **10 DMC 351 Coral**
  Head (shade 6 of 10), neck (shade 8 of 9), turret eye (shade 4 of 8) and 3 more parts
- **11 DMC 3844 Dark Bright Turquoise**
  Head (shade 7 of 10), throat and jaw (shade 6 of 7) and 5 more parts
- **12 DMC 3845 Medium Bright Turquoise**
  Head (shade 8 of 10), brow (light), turret eye (shade 6 of 8) and 3 more parts
- **13 DMC 352 Light Coral**
  Head (shade 9 of 10), turret eye and scales (shade 7 of 8)
- **14 DMC 3078 Very Light Golden Yellow**
  Lip stripe and iris (light)
- **15 DMC 504 Very Light Blue Green**
  Lip stripe (dark), eye rings (shade 6 of 7)
- **16 DMC 3865 Winter White**
  Eye rings (shade 7 of 7), lip stripe (middle), eye light
- **17 DMC 310 Black** Mouth and pupil
- **18 DMC 823 Dark Navy Blue**
  Eye rings (shade 1 of 7), brow (darkest), nostril
- **19 DMC 725 Medium Light Topaz**
  Iris (middle), casque ridge
- **20 DMC 782 Dark Topaz** Iris (dark)

For your own stitching, gifts and handmade pieces you sell. Do not resell or share this PDF or copies of it.

Beaded panther chameleon portrait

6 inch hoop

How to read it

Floss is six strands. Cut 18 inches (45 cm), pull out the number given one at a time, and lay them together.

Inside a filled shape start with two or three tiny stitches, which the filling covers. Start a line with a small knot on the back. End each thread by running the needle under the backs of a few stitches.

Each small ring is one French knot. A fine broken line inside a shape is where two shades meet: trace it, do not stitch it.

A number on the picture is a color of the list of floss on page 1. The fine lines on the colors show which way the stitches lie.

Every stitch in pictures: flossfield.com/embroidery/stitches. The first time: flossfield.com/embroidery/guides/how-to-start.



1	DMC 964 Light Seagreen	8	DMC 350 Medium Coral	15	DMC 504 Very Light Blue Green
2	DMC 958 Dark Seagreen	9	DMC 3765 Very Dark Peacock Blue	16	DMC 3865 Winter White
3	DMC 911 Medium Emerald Green	10	DMC 351 Coral	17	DMC 310 Black
4	DMC 500 Very Dark Blue Green	11	DMC 3844 Dark Bright Turquoise	18	DMC 823 Dark Navy Blue
5	DMC 3818 Ultra Very Dark Emerald G...	12	DMC 3845 Medium Bright Turquoise	19	DMC 725 Medium Light Topaz
6	DMC 815 Medium Garnet	13	DMC 352 Light Coral	20	DMC 782 Dark Topaz
7	DMC 349 Dark Coral	14	DMC 3078 Very Light Golden Yellow		

How many strands

Split stitch. 2 strands: mouth; 1 strand: brow.
French knot. 2 strands: snout ridge, brow; 1 or 2 strands: scales, casque ridge; 1 strand: eye scales.

For your own stitching, gifts and handmade pieces you sell. Do not resell or share this PDF or copies of it.

Beaded panther chameleon portrait

6 inch hoop

Print at 100% and check the square below with a ruler. Fold the fabric in four: the folds meet the four ticks of the ring.

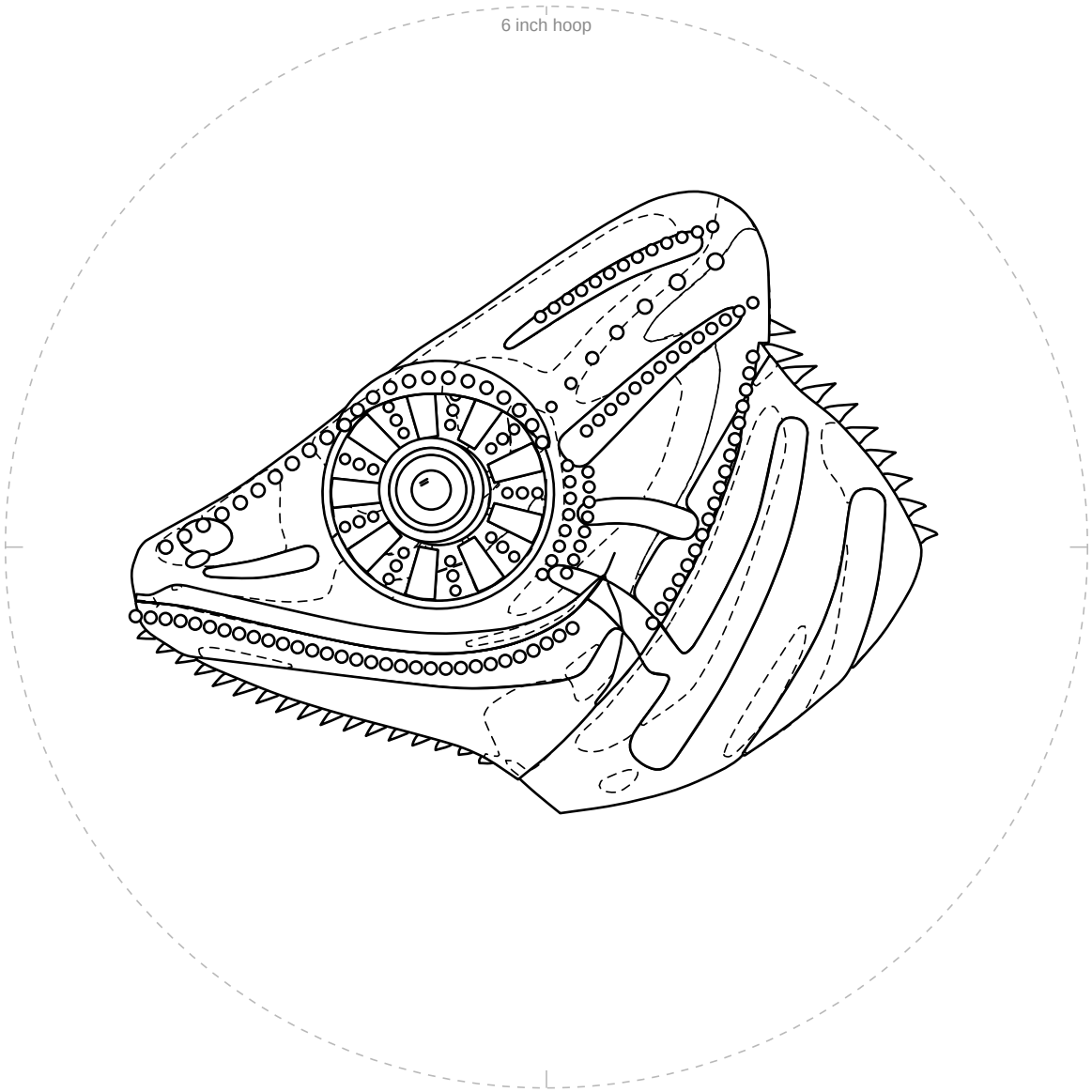

1 in
25.4 mm

Check square: 1 inch (25.4 mm) on each side.
If it measures anything else, print again at 100% with scaling off.

For your own stitching, gifts and handmade pieces you sell. Do not resell or share this PDF or copies of it.

Beaded panther chameleon portrait

6 inch hoop

Mirrored. Trace this page with an iron-on transfer pen or pencil, then press it ink side down on the fabric.

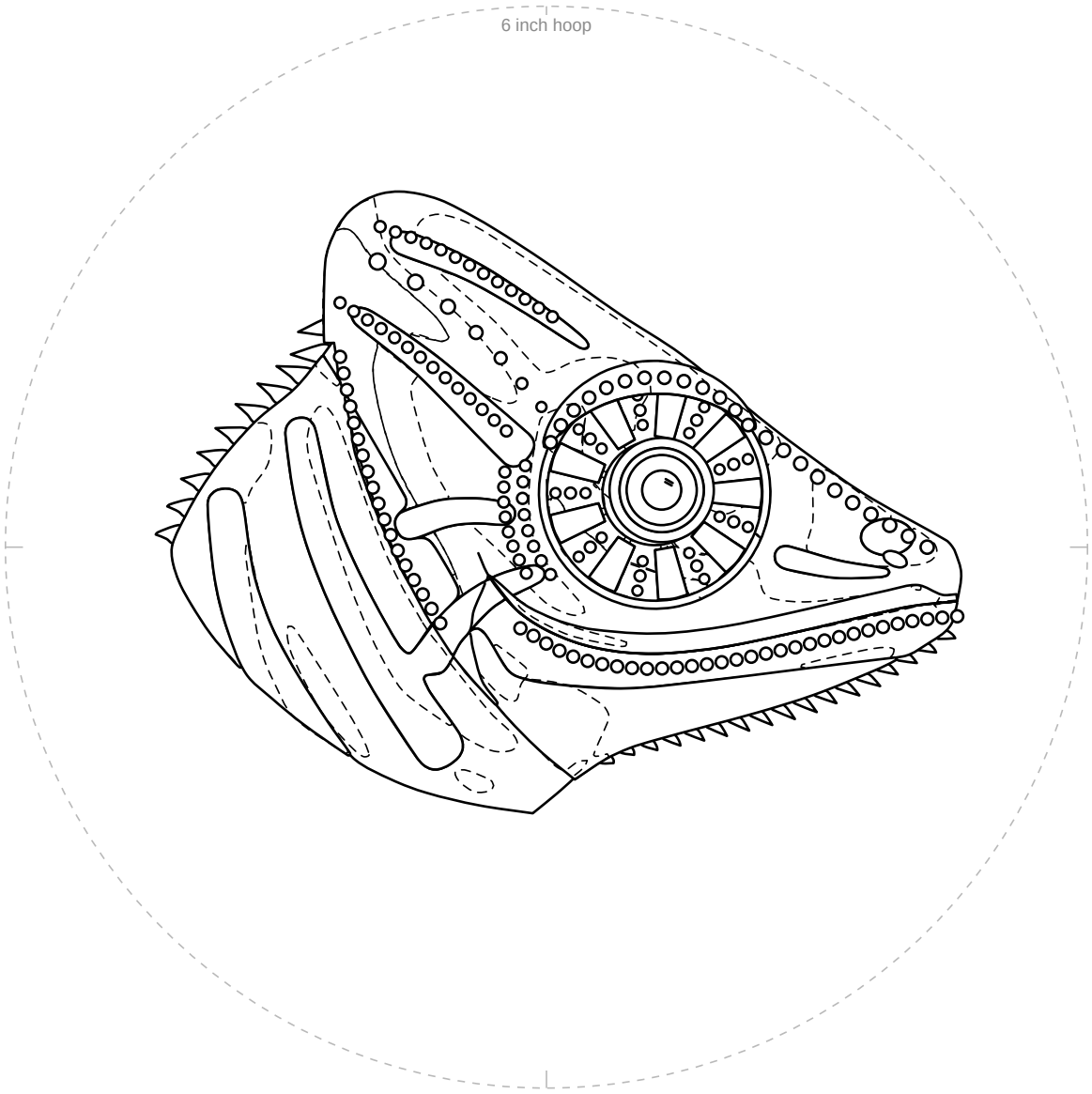

1 in
25.4 mm

Check square: 1 inch (25.4 mm) on each side.
If it measures anything else, print again at 100% with scaling off.

For your own stitching, gifts and handmade pieces you sell. Do not resell or share this PDF or copies of it.