Ramen bowl with egg and swirling noodles

Sized for a 6 inch hoop (15 cm). The stitched design is about 4.4 × 4.2 in (11.2 × 10.7 cm).



Which color goes where: by number on page 2.
Fabric: indigo cotton or linen.

Three ways onto dark fabric

1. **Light shines through it**
   Lay page 3 on a bright light box, tape the fabric over it and trace the lines with a white marking pencil or pen.
2. **No light shines through**
   Print page 3 on a sticky wash-away sheet, smooth it onto fabric that can be washed, stitch through both and rinse it away.
3. **White or yellow carbon paper**
   Lay it colored side down on the fabric with page 3 on top, tape the layers and trace firmly with a ballpoint pen. Go over a faint line with a white pencil.

Page 3 is the pattern at actual size (page 4 is its mirror, for an iron-on pen on a light fabric). Print it at 100% with scaling turned off. Then put the fabric in the hoop: inner ring under, drawing up, tight as a drum.

Floss

- **1 DMC 498 Dark Red**
  Inside of the bowl (lighter), bowl and bowl foot (middle), rim (darker)
- **2 DMC 815 Medium Garnet**
  Bowl and bowl foot (dark), rim line and bowl edge, inside of the bowl (darker)
- **3 DMC 321 Red** Bowl and bowl foot (light), rim (lighter), chopsticks
- **4 DMC 743 Medium Yellow**
  Waves, wave border and chopstick bands, egg yolk (light)
- **5 DMC 301 Medium Mahogany** Broth (middle)
- **6 DMC 300 Very Dark Mahogany**
  Noodle edges, noodle shadows and pork edge, broth (dark)
- **7 DMC 921 Copper** Broth (light)
- **8 DMC 741 Medium Tangerine** Egg yolk (middle), oil rings
- **9 DMC 3345 Dark Hunter Green** Nori, scallion edge (darker)
- **10 DMC 934 Black Avocado Green** Nori edge
- **11 DMC 677 Very Light Old Gold** Noodles (lightest)
- **12 DMC 729 Medium Old Gold** Noodles (darkest), egg edge
- **13 DMC 676 Light Old Gold** Noodles (dark)
- **14 DMC 739 Ultra Very Light Tan** Noodles (light), pork fat
- **15 DMC 3830 Terra Cotta** Pork (darker)
- **16 DMC 758 Very Light Terra Cotta** Pork (lighter)
- **17 DMC BLANC White** Egg white (light), fish cake (lighter), yolk light
- **18 DMC 762 Very Light Pearl Gray**
  Egg white (middle), fish cake (darker)
- **19 DMC 970 Light Pumpkin** Yolk edge, egg yolk (dark)
- **20 DMC 318 Light Steel Gray**
  Fish cake side and fish cake edge, egg white (dark)
- **21 DMC 602 Medium Cranberry** Fish cake swirl
- **22 DMC 772 Very Light Yellow Green** Scallions
- **23 DMC 703 Chartreuse** Scallion edge (lighter)

Stitch in this order

Filled parts from the back of the picture forward, then lines.

1. **Satin stitch**, 2 strands
   Bowl foot, rim, noodle shadows, noodles, chopsticks, pork edge, pork fat, fish cake side, fish cake swirl, scallions
2. **Long and short stitch**, strands by part on page 2
   Bowl, inside of the bowl, broth, nori, pork, egg white, egg yolk, fish cake
3. **Split stitch**, strands by part on page 2
   Waves, bowl edge, oil rings, nori edge, noodle edges, yolk edge, fish cake edge
4. **Stem stitch**, strands by part on page 2
   Wave border, rim line, egg edge, scallion edge
5. **Straight stitch**, strands by part on page 2
   Chopstick bands, yolk light, scallion edge

For your own stitching, gifts and handmade pieces you sell. Do not resell or share this PDF or copies of it.

Ramen bowl with egg and swirling noodles

6 inch hoop

How to read it

Floss is six strands. Cut 18 inches (45 cm), pull out the number given one at a time, and lay them together.

Inside a filled shape start with two or three tiny stitches, which the filling covers. Start a line with a small knot on the back. End each thread by running the needle under the backs of a few stitches.

A fine broken line inside a shape is where two shades meet: trace it, do not stitch it.

A number on the picture is a color of the list of floss on page 1. The fine lines on the colors show which way the stitches lie.

Every stitch in pictures: flossfield.com/embroidery/stitches. The first time: flossfield.com/embroidery/guides/how-to-start.

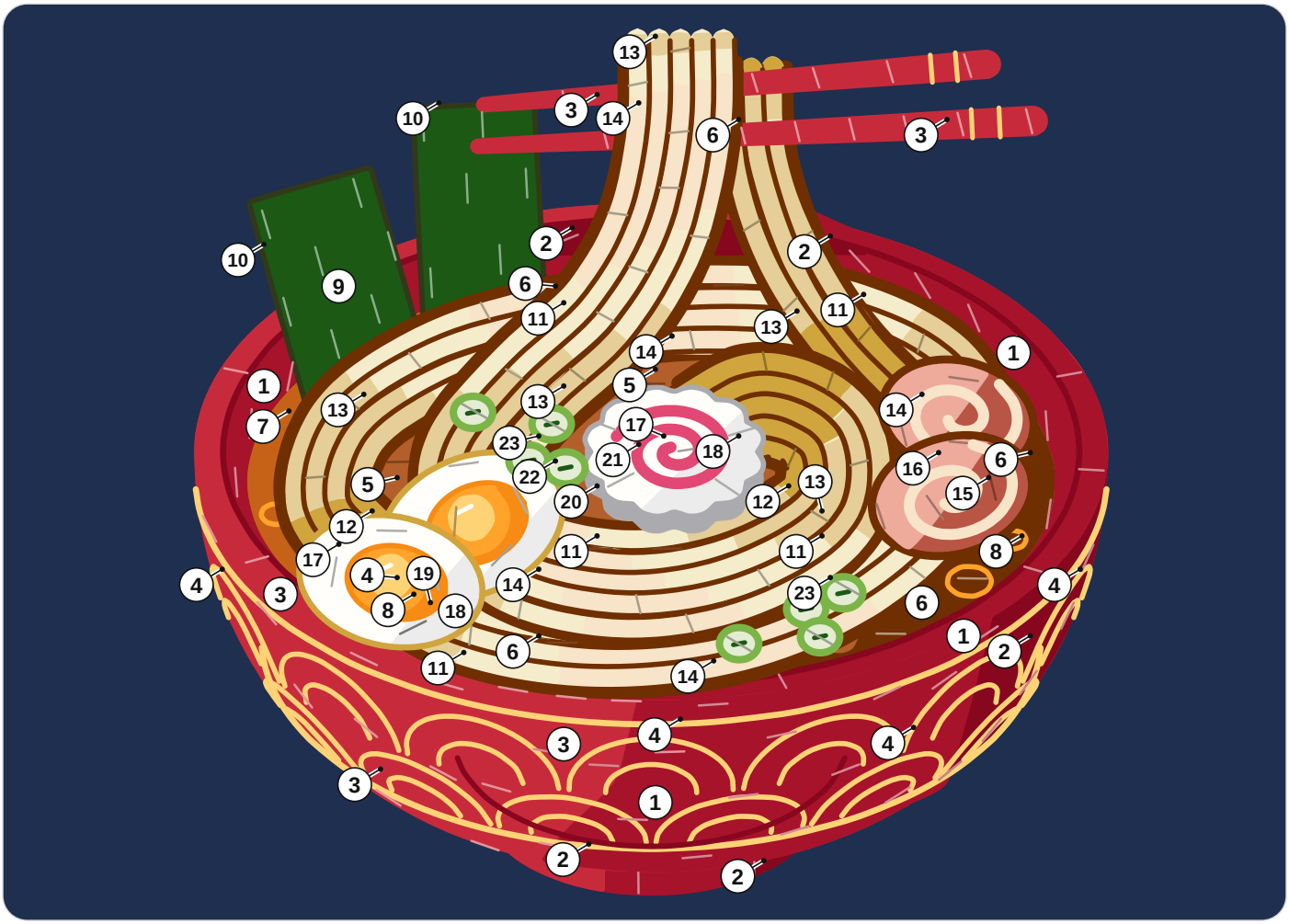

1	DMC 498 Dark Red	**9**	DMC 3345 Dark Hunter Green	**17**	DMC BLANC White
2	DMC 815 Medium Garnet	**10**	DMC 934 Black Avocado Green	**18**	DMC 762 Very Light Pearl Gray
3	DMC 321 Red	**11**	DMC 677 Very Light Old Gold	**19**	DMC 970 Light Pumpkin
4	DMC 743 Medium Yellow	**12**	DMC 729 Medium Old Gold	**20**	DMC 318 Light Steel Gray
5	DMC 301 Medium Mahogany	**13**	DMC 676 Light Old Gold	**21**	DMC 602 Medium Cranberry
6	DMC 300 Very Dark Mahogany	**14**	DMC 739 Ultra Very Light Tan	**22**	DMC 772 Very Light Yellow Green
7	DMC 921 Copper	**15**	DMC 3830 Terra Cotta	**23**	DMC 703 Chartreuse
8	DMC 741 Medium Tangerine	**16**	DMC 758 Very Light Terra Cotta		

How many strands

Long and short stitch. 2 strands: bowl, inside of the bowl, broth, nori; 1 strand: pork, egg white, egg yolk, fish cake.
Split stitch. 3 strands: bowl edge, nori edge; 2 strands: waves, oil rings; 1 strand: noodle edges, yolk edge, fish cake edge.
Stem stitch. 3 strands: scallion edge; 2 strands: wave border, rim line, egg edge.
Straight stitch. 3 strands: chopstick bands; 2 strands: yolk light; 1 strand: scallion edge.

For your own stitching, gifts and handmade pieces you sell. Do not resell or share this PDF or copies of it.

Ramen bowl with egg and swirling noodles

6 inch hoop

Print at 100% and check the square below with a ruler. Fold the fabric in four: the folds meet the four ticks of the ring.

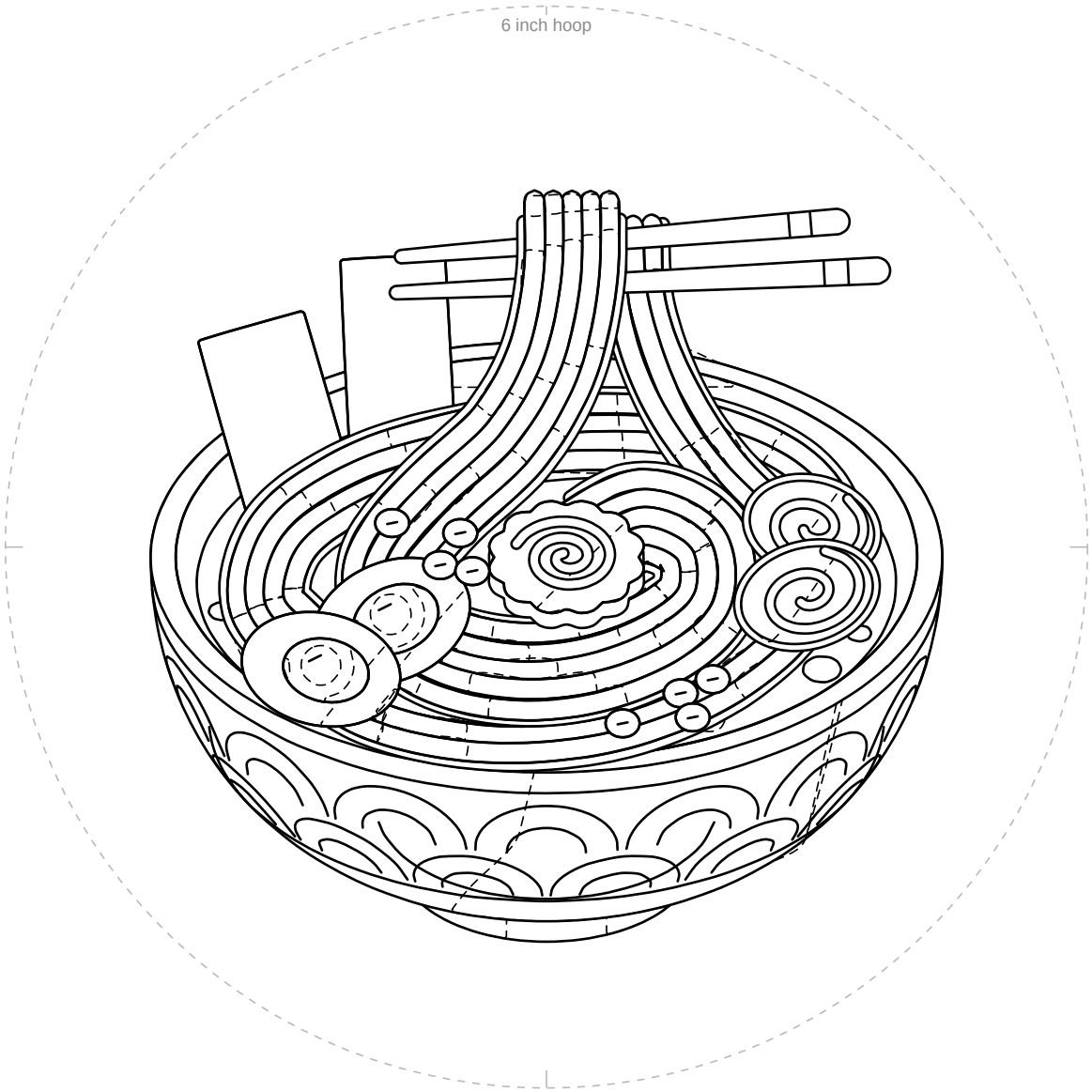

1 in
25.4 mm

Check square: 1 inch (25.4 mm) on each side.
If it measures anything else, print again at 100% with scaling off.

For your own stitching, gifts and handmade pieces you sell. Do not resell or share this PDF or copies of it.

Ramen bowl with egg and swirling noodles

6 inch hoop

Mirrored. Trace this page with an iron-on transfer pen or pencil, then press it ink side down on the fabric.

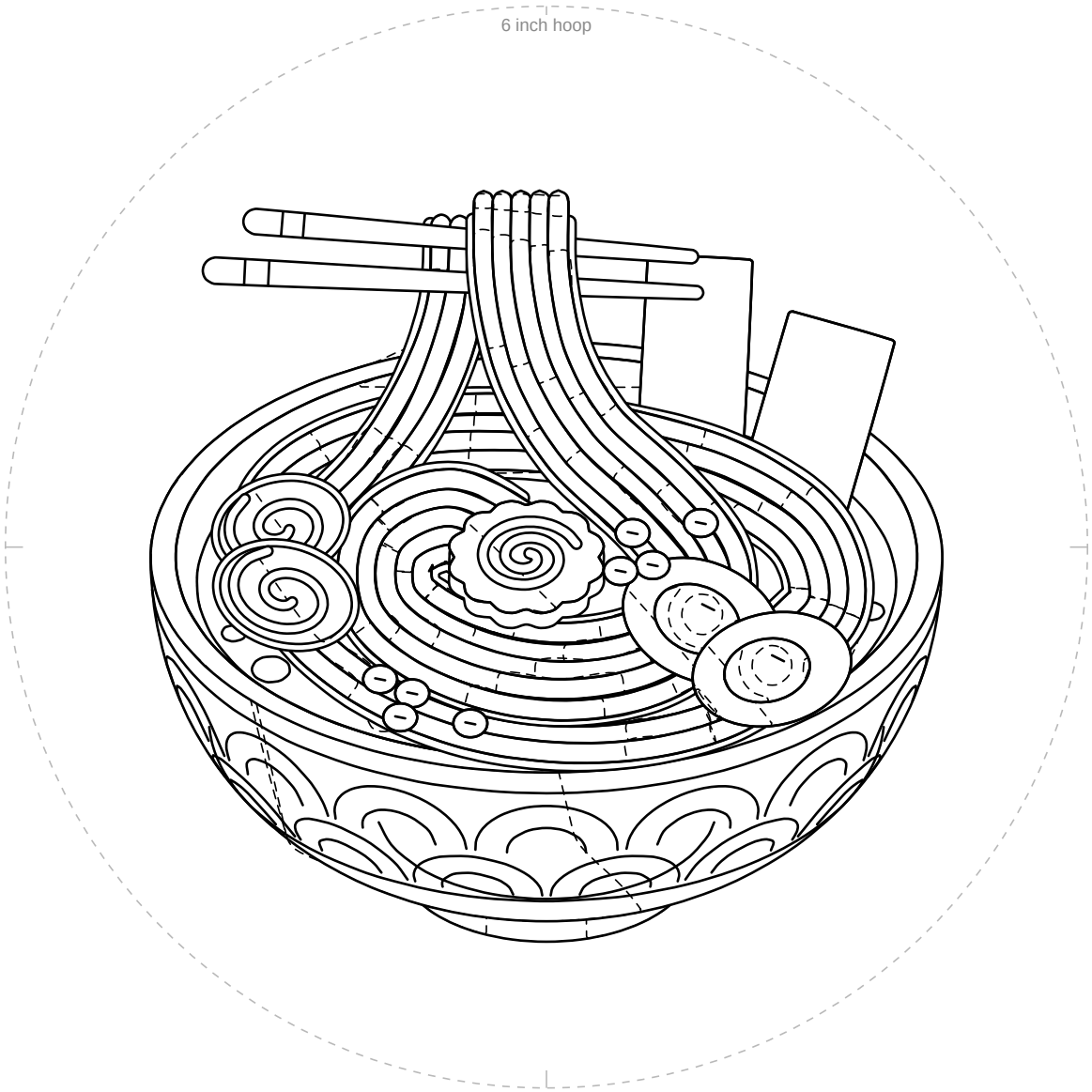

1 in
25.4 mm

Check square: 1 inch (25.4 mm) on each side.
If it measures anything else, print again at 100% with scaling off.

For your own stitching, gifts and handmade pieces you sell. Do not resell or share this PDF or copies of it.