Retro camera with a sunset landscape

Sized for a 6 inch hoop (15 cm). The stitched design is about 4.7 × 3.8 in (11.9 × 9.7 cm).



Which color goes where.

Stitches

- **Satin stitch**, 2 strands
  Strap, lugs, strap ends, strap rings, camera plates, finder, finder window, flash shoe, knobs, small windows, flower center, lens barrel, and 6 more
- **Straight stitch**, 1 to 2 strands
  Strap ends, knob ridges, flower, lens marks
- **Woven filling stitch**, 3 strands
  Leather
- **Back stitch**, 1 strand
  Small windows
- **Lazy daisy stitch**, 3 strands
  Flower

Floss

- **DMC 602 Medium Cranberry**
  Strap (darkest), sky (dark)
- **DMC 721 Medium Orange Spice**
  Strap and knobs (dark), sky (middle), small windows (light), flower center
- **DMC 742 Light Tangerine**
  Strap and sky (light), lens ring and strap rings, knobs (middle), strap ends (lighter)
- **DMC 739 Ultra Very Light Tan**
  Strap (lightest), camera plates and finder (darker), lens barrel (middle), flower
- **DMC 738 Very Light Tan**
  Lens barrel (dark), knobs (light), flash shoe and lugs
- **DMC 3826 Golden Brown**
  Strap ends (darker), knob ridges, small windows (dark)
- **DMC 712 Cream**
  Camera plates and finder (lighter), lens barrel (light)
- **DMC 3810 Dark Turquoise** Leather and lens marks
- **DMC 597 Turquoise**
  Finder window, small windows (middle)
- **DMC 745 Light Pale Yellow** Sky (lightest)
- **DMC 350 Medium Coral** Sky (darkest)
- **DMC 743 Medium Yellow** Sun
- **DMC 554 Light Violet** Mountains (light)
- **DMC 209 Dark Lavender** Mountains (middle)
- **DMC 3837 Ultra Dark Lavender** Mountains (dark)
- **DMC 472 Ultra Light Avocado Green** Hills (lightest)
- **DMC 471 Very Light Avocado Green** Hills (light)
- **DMC 470 Light Avocado Green** Hills (dark)
- **DMC 937 Medium Avocado Green** Hills (darkest)
- **DMC 598 Light Turquoise** River (darker)
- **DMC 3811 Very Light Turquoise** River (lighter)

Three ways to transfer the pattern

1. **Fabric you can see through**
   Tape page 2 to a sunny window or lay it on a light box, tape the fabric over it and trace the lines with a sharp pencil or a water-soluble pen.
2. **Fabric you cannot see through**
   Lay dressmaker's carbon paper colored side down on the fabric with page 2 on top, tape the layers and trace the lines firmly with a ballpoint pen.
3. **Iron-on**
   Go over the lines of page 3, the mirrored page, with an iron-on transfer pen, lay it ink side down on the fabric and press with a dry iron.

Pages 2 and 3 are the pattern at actual size. Print them at 100% with scaling turned off.

For your own stitching, gifts and handmade pieces you sell. Do not resell or share this PDF or copies of it.

Retro camera with a sunset landscape

6 inch hoop

Print at 100% (actual size). Do not scale or fit to page. Check the square below with a ruler before you trace.

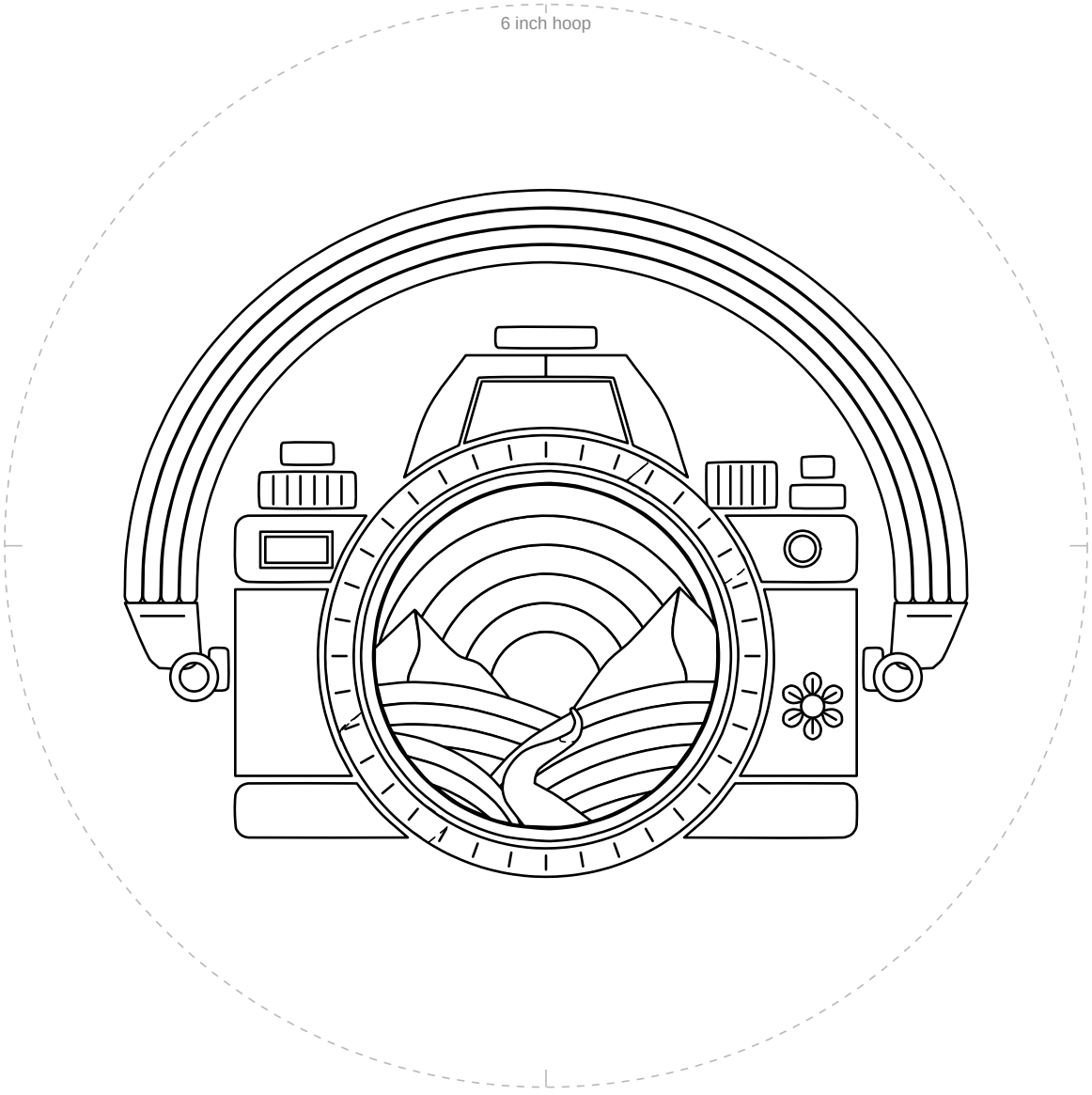

1 in
25.4 mm

Check square: 1 inch (25.4 mm) on each side.
If it measures anything else, print again at 100% with scaling off.

For your own stitching, gifts and handmade pieces you sell. Do not resell or share this PDF or copies of it.

Retro camera with a sunset landscape

6 inch hoop

Mirrored. Trace this page with an iron-on transfer pen or pencil, then press it ink side down on the fabric.

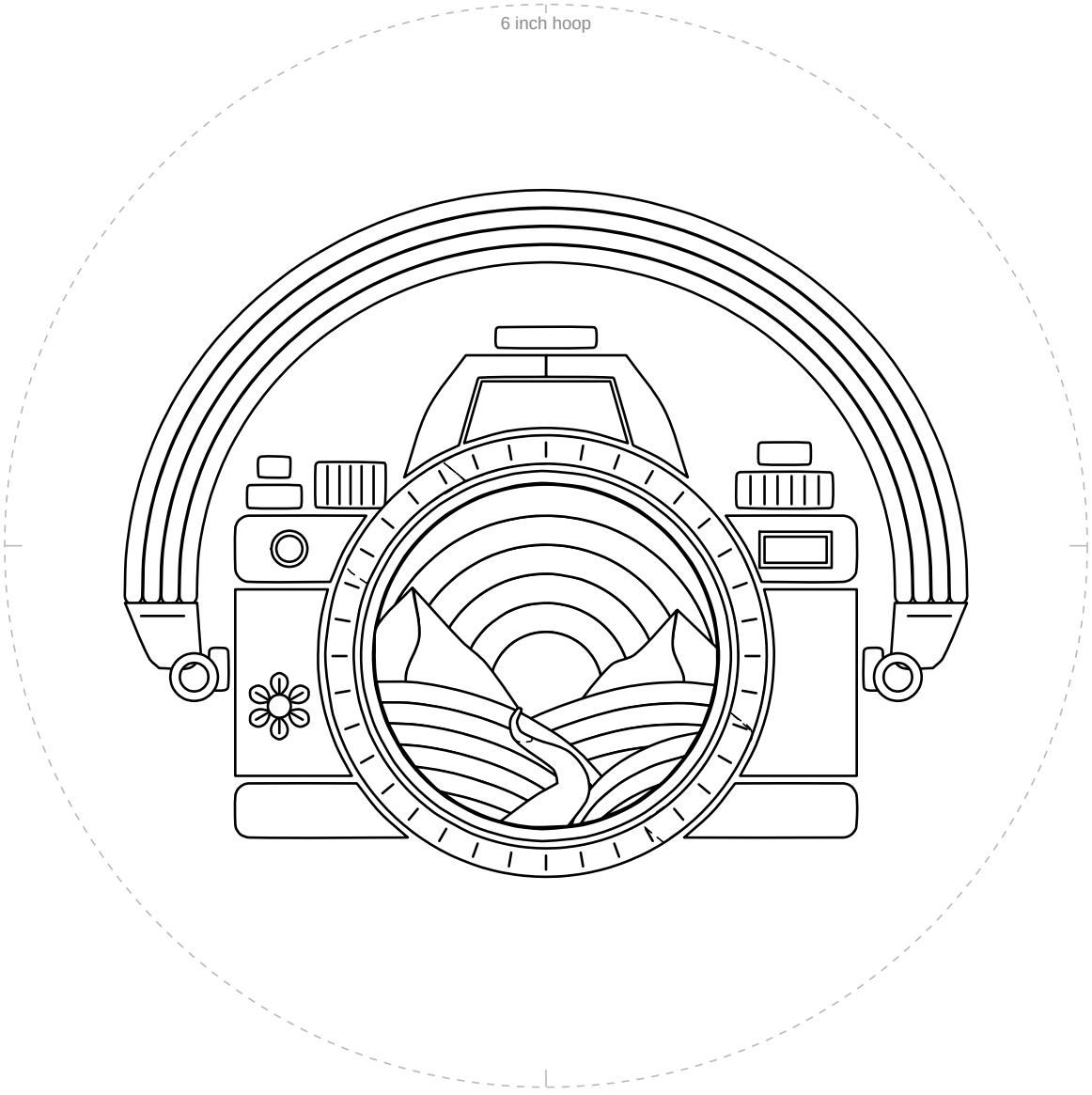

1 in
25.4 mm

Check square: 1 inch (25.4 mm) on each side.
If it measures anything else, print again at 100% with scaling off.

For your own stitching, gifts and handmade pieces you sell. Do not resell or share this PDF or copies of it.